REUSE OF DOCUMENTS: This document and the ideas and design incorporated herein, as an instrument of professional service, is the property of LACO Associates and shall not be reused in whole or part for any other project without LACO Associates written authorization.

YUROK VETERANS CEMETERY

BALD HILLS ROAD
HUMBOLDT COUNTY, CA
APN: 531-094-005
FAI NO. CA-08-03

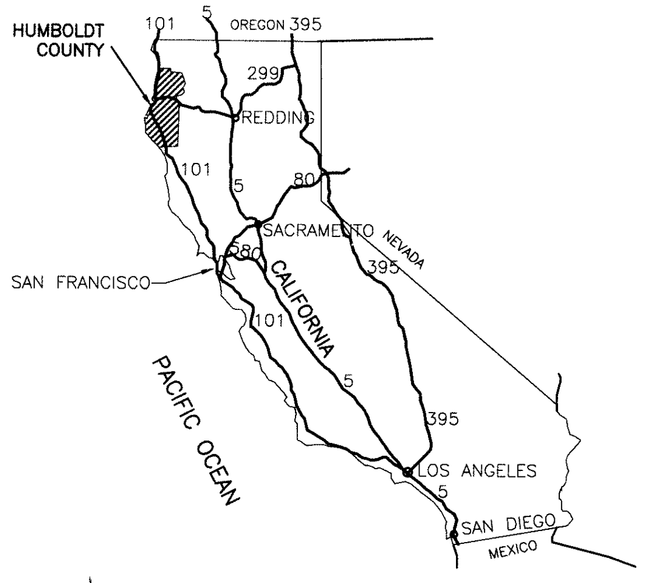

LOCATION MAP
N.T.S.

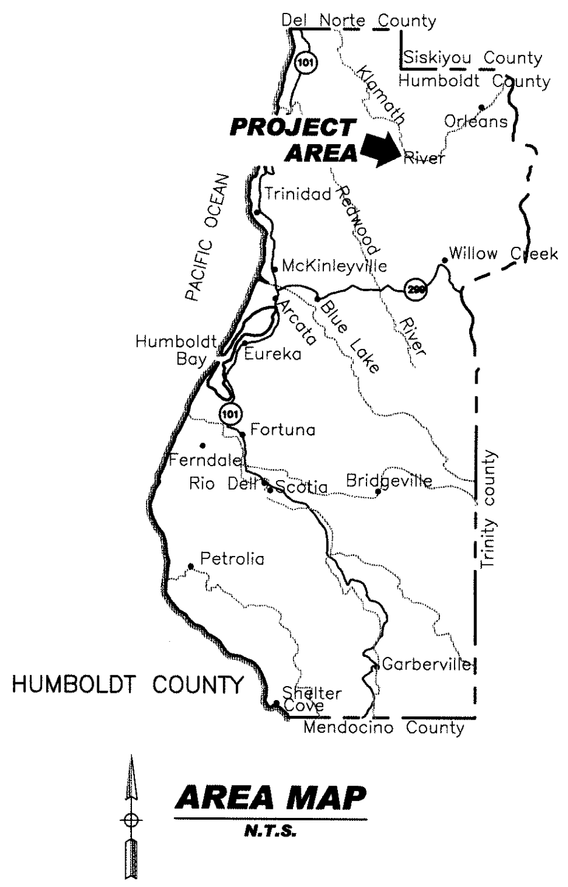

AREA MAP
N.T.S.

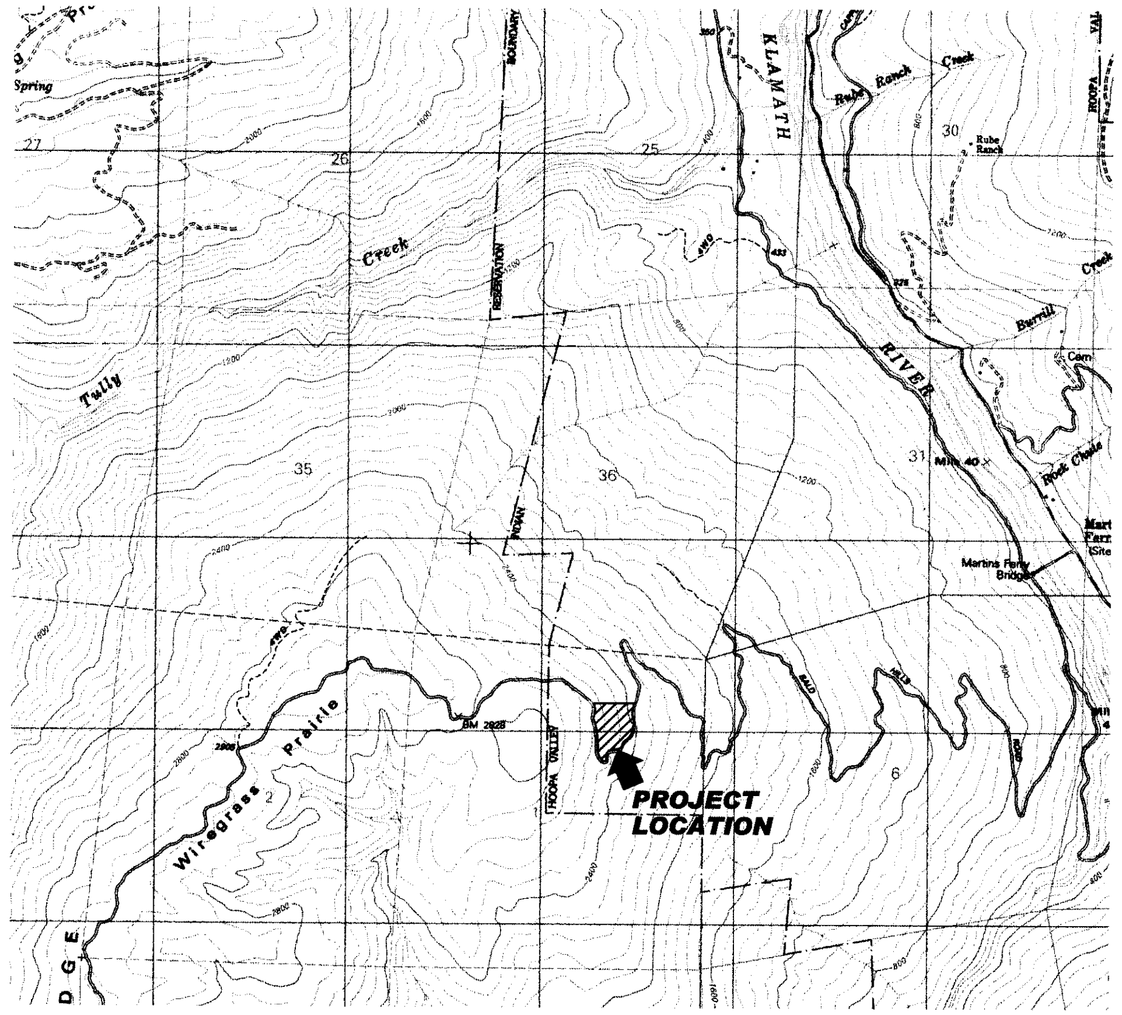

VICINITY MAP
1"=2000'

1"
GRAPHIC SCALE MEASURES 1 INCH ON FULL-SIZE PLANS.

QUANTITIES		
DESCRIPTION	AREA SF	VOLUME CY
MAINTENANCE BUILDING	900	
BATHROOMS	98	
COMMITTAL SHELTER	112	
BURIAL AND CREMATORY SITE 'A'	7,785	
BURIAL AND CREMATORY SITE 'B'	10,547	
EARTHWORK CUT		7,517
EARTHWORK FILL		5,881
EARTHWORK NET		1,636 CUT
CLASS-2 BASE FOR EMBANKMENT		5,072
CLASS-2 BASE FOR ROADS AND PATHS		450

SHEET INDEX

G1	TITLE SHEET
G2	CIVIL ABBREVIATION AND LEGEND SHEET
G3	CONSTRUCTION NOTES AND CIVIL SPECIFICATIONS
C1	TOPOGRAPHIC SURVEY
C2	DEMOLITION PLAN
C3	SITE PLAN
C3.1	GRAVESITE LAYOUT PLAN
C3.2	SURFACE PAVING AND MATERIALS PLAN
C4	COMMITTAL SHELTER AND RESTROOM PLAN
C5	MAINTENANCE BUILDING AND FLAG POLE PLANS
C6	PLAN AND PROFILE MAIN ROAD STA 1+00 TO 5+00
C7	PLAN AND PROFILE MAIN ROAD STA 5+00 TO 819
C8	PLAN AND PROFILE MAINTENANCE PATH
C9	STORM DRAIN PLAN AND PROFILE
C10	DETAILS
C11	SECTIONS
C12	DETAILS
C13	EROSION AND SEDIMENT CONTROL PLAN
C14	EROSION CONTROL DETAILS
L1.1	PLANTING KEY PLAN AND SCHEDULE
L1.2	ENLARGED PLANTING PLAN
L1.3	ENLARGED PLANTING PLAN
L1.4	ENLARGED PLANTING PLAN
A0.1	COVER SHEET, PROJECT INFO, STANDARDS
A0.2	ARCHITECTURAL SPECIFICATIONS
A1.1	BUILDING & SITE ELEMENTS - ENLARGED SITE PLAN
A2.1	RESTRM/STORAGE & COMMITTAL SHELTER - FLOOR PLANS
A2.2	MAINTENANCE BUILDING - FLOOR PLAN
A2.3	RESTRM/STORAGE COMMITTAL SHELTER - ROOF PLANS
A2.4	RESTRM/STORAGE COMMITTAL SHELTER - REFLECTED CEILING PLANS
A2.5	MAINTENANCE BUILDING - ROOF & REFLECTED CEILING PLANS
A2.6	ENTRY GATE & WALLS - PLAN ELEV'S SECTION
A3.1	SITE ELEMENTS - EXTERIOR ELEVATIONS - SITE WORK
A3.2	COMMITTAL SHELTER - EXTERIOR ELEVATIONS
A3.3	RESTROOM AND STORAGE BUILDING - EXTERIOR ELEVATIONS
A3.4	MAINTENANCE BUILDING - EXTERIOR ELEVATIONS
A4.1	INTERIOR ELEVATIONS
A4.2	INTERIOR ELEVATIONS. SCHEDULES & TYPES
A8.1	DETAILS
A8.2	HAND WASHING BASIN AND KIOSK
S0.1	NOTES
S1	MAINTENANCE BUILDING FOUNDATION PLAN AND SECTION
S2	MAINTENANCE BUILDING ROOF FRAMING
S3	MAINTENANCE BUILDING DETAILS
S4	RESTROOM FOUNDATION PLAN AND SECTION
S5	ROOF FRAMING PLAN
S6	NOT USED
S7	RETAINING WALLS AND FLAG POLE
S8	COMMITTAL SHELTER STRUCTURAL
E1	PHOTOVOLTAIC, MICRO HYDRO, GENERATOR AND POWER SYSTEMS

APPROVALS:

YUROK TRIBE

PROJECT ENGINEER
NATHAN TOEWS, RCE 70251

REGISTERED PROFESSIONAL ENGINEER — NATHAN TOEWS — No. 70251 — Exp. 9/30/12 — CIVIL — STATE OF CALIFORNIA

LACO ASSOCIATES
EUREKA · UKIAH · CONCORD
CONSULTING ENGINEERS
1-800-515-5054
WWW.LACOASSOCIATES.COM

NO.	REVISION	BY	CHK	DATE
	BID ADDENDUM 1	JDB	NKT	6/27/11
	100% SUBMITTAL	JDB	MAH	5/24/11
	PROGRESS SUBMITTAL #1	JDB	MAH	5/18/11
	75% SUBMITTAL	JDB	MAH	4/14/11
	DD SUBMITTAL	JDB	MAH	4/7/11

YUROK VETERANS CEMETERY
COVER SHEET

BALD HILLS ROAD, HUMBOLDT COUNTY, CA
APN:531-094-005

SCALE	SCALE
DRAWN	JDB
CHECK	MAH
APPVD	MAH
DATE	4/7/11
JOB NO.	7105.03
SHEET	G1

Jun 27,2011 - 8:13am
T:\Cadfiles\7100\7105 YUROK VETERANS CEMETERY\DWG\ 7105-03 CIV G1.dwg

REUSE OF DOCUMENTS: This document and the ideas and design incorporated herein, as an instrument of professional service, is the property of LACO Associates and shall not be reused in whole or part for any other project without LACO Associates written authorization.

ABBREVIATIONS

A

AB	–	AGGREGATE BASE
ABON	–	ABANDONED
AC	–	ASPHALT CONCRETE
ACP	–	ASBESTOS CEMENT PIPE
ACI	–	AMERICAN CONCRETE INSTITUTE
AG	–	AGGREGATE
APPROX	–	APPROXIMATELY
ASTM	–	AMERICAN SOCIETY FOR TESTING & MATERIALS
@	–	AT

B

BC	–	BEGIN CURVE
BCR	–	BEGIN CURB RETURN
BF	–	BLIND FLANGE
BFV	–	BUTTERFLY VALVE
BLDG	–	BUILDING
BM	–	BENCH MARK
BOT	–	BOTTOM
BRG	–	BEARING
BTWN	–	BETWEEN
BVC	–	BEGINNING OF VERTICAL CURVE
BW	–	BOTTOM OF WALL

C

CATV	–	CABLE TELEVISION
CB	–	CATCH BASIN
CEIL	–	CEILING
CFM	–	CUBIC FEET PER MINUTE
CI	–	CAST IRON
CIP	–	CAST IRON PIPE
C.I.P.	–	CAST–IN–PLACE
CJ	–	CONSTRUCTION JOINT
CL, ℄	–	CENTERLINE
CLR	–	CLEAR
CMP	–	CORRUGATED METAL PIPE
CMU	–	CONCRETE MASONRY UNIT
CO	–	CLEANOUT
CONC	–	CONCRETE
CONT	–	CONTINUOUS
COORD	–	COORDINATE
CPLG	–	COUPLING
CTR	–	CENTER
CU FT	–	CUBIC FEET
CV	–	CHECK VALVE
CW	–	COLD WATER
CY	–	CUBIC YARD

D

°	–	DEGREE (ANGLE)
d	–	PENNY (NAIL SIZE)
DBL	–	DOUBLE
DI	–	DRAINAGE INLET
DIA	–	DIAMETER
DIAG	–	DIAGONAL
DIM	–	DIMENSION
DIP	–	DUCTILE IRON PIPE
DRWY	–	DRIVEWAY
DWG	–	DRAWING

E

<E>	–	EXISTING
EA	–	EACH
EC	–	END CURVE
ECR	–	END CURB RETURN
EF	–	EACH FACE
EL	–	ELBOW
ELEC	–	ELECTRIC OR ELECTRICAL
ELEV	–	ELEVATION
ENGR	–	ENGINEER
EP	–	EDGE OF PAVEMENT
EQ	–	EQUAL
EQUIP	–	EQUIPMENT
EVC	–	END OF VERTICAL CURVE
EW	–	EACH WAY
EXC	–	EXCAVATE
EXP JT	–	EXPANSION JOINT
EXT	–	EXTERIOR

F

FC	–	FACE OF CURB
FF	–	FINISHED FLOOR
FG	–	FINISHED GRADE
FH	–	FIRE HYDRANT
FIN	–	FINISH
FL, ℄	–	FLOW LINE
FLG	–	FLANGE
FLR	–	FLOOR
FS	–	FINISHED SURFACE
FT	–	FOOT
FT^2	–	SQUARE FEET
FT^3	–	CUBIC FEET
FTG	–	FOOTING

G

G	–	GAS
GALV	–	GALVANIZED
GIP	–	GALVANIZED IRON PIPE
GPM	–	GALLONS PER MINUTE
GRD	–	GRADE
GSP	–	GALVANIZED STEEL PIPE
GV	–	GATE VALVE

H

HB	–	HOSE BIBB
HDR	–	HEADER
HP	–	HORSEPOWER
HORIZ	–	HORIZONTAL
HT	–	HEIGHT
HW	–	HOT WATER

I

ID	–	INSIDE DIAMETER
IN	–	INCH
INT	–	INTERIOR
INV	–	INVERT

J

JT	–	JOINT
JP	–	JOINT POLE

K

KIP	–	THOUSAND POUNDS
KW	–	KILOWATT

L

∡	–	ANGLE (DEGREES)
LB	–	POUND
LF	–	LINEAR FEET
LG	–	LONG
LT	–	LEFT

M

MATL	–	MATERIAL
MAX	–	MAXIMUM
MECH	–	MECHANICAL
MFR	–	MANUFACTURER
MH	–	MANHOLE
MIN	–	MINIMUM
MISC	–	MISCELLANEOUS
MJ	–	MECHANICAL JOINT
MTL	–	METAL

N

<N>	–	NEW
NC	–	NORMALLY CLOSED
NIC	–	NOT IN CONTRACT
NO.	–	NUMBER
NO	–	NORMALLY OPEN
NPT	–	NATIONAL PIPE THREAD
NTS	–	NOT TO SCALE
#	–	NUMBER

O

OC	–	ON CENTER
OD	–	OUTSIDE DIAMETER
OG	–	ORIGINAL GROUND
OHE	–	OVERHEAD ELECTRIC
OZ	–	OUNCE
OVHD	–	OVERHEAD

P

PB	–	PULL BOX
PCC	–	POINT OF COMPOUND CURVATURE
PCF	–	POUNDS PER CUBIC FOOT
PE	–	PLAIN END
PERF	–	PERFORATED
PEP	–	POLYETHYLENE PIPE
PL, ℙ	–	PROPERTY LINE
PLYWD	–	PLYWOOD
POC	–	POINT ON CURVE
PP	–	POWER POLE
PRC	–	POINT OF REVERSE CURVATURE
PREFAB	–	PREFABRICATED
PSF	–	POUNDS PER SQUARE FOOT
PSI	–	POUNDS PER SQUARE INCH
PSIG	–	POUNDS PER SQUARE INCH GAUGE
PV	–	PLUG VALVE
PVC	–	POLYVINYL CHLORIDE PLASTIC
PVI	–	POINT OF VERTICAL INTERSECTION
PVMT	–	PAVEMENT
PVT	–	PRIVATE

Q

QTY	–	QUANTITY

R

R	–	RADIUS
RC	–	RELATIVE COMPACTION
RCP	–	REINFORCED CONCRETE PIPE
RD	–	ROAD
RDCR	–	REDUCER
RDWD	–	REDWOOD
REQD	–	REQUIRED
RM	–	ROOM
RSP	–	ROCK SLOPE PROTECTION
RT	–	RIGHT
R/W	–	RIGHT–OF–WAY

S

SL	–	SLOPE
SCHED	–	SCHEDULE
SD	–	STORM DRAIN
SDMH	–	STORM DRAIN MAN HOLE
SECT	–	SECTION
SHT	–	SHEET
SIM	–	SIMILAR
SPEC	–	SPECIFICATIONS
SQ	–	SQUARE
SQ FT	–	SQUARE FOOT
SQ IN	–	SQUARE INCH
SS	–	SANITARY SEWER
SSMH	–	SEWER SYSTEM MAN HOLE
STA	–	STATION
STD	–	STANDARD
STL	–	STEEL
SW	–	SIDEWALK
SYMM	–	SYMMETRICAL

T

T	–	TELEPHONE
TAN	–	TANGENT
T&B	–	TOP AND BOTTOM
T&G	–	TONGUE AND GROOVE
TBM	–	TEMPORARY BENCH MARK
TC	–	TOP OF CURB
TELEM	–	TELEMETRY
TEMP	–	TEMPERATURE OR TEMPORARY
THD	–	THREAD
TOC	–	TOP OF CONCRETE
TOG	–	TOP OF GRATE
TOF	–	TOP OF FOOTING
TOW	–	TOP OF WALL
TP	–	TOP OF PAVEMENT OR TELEPHONE POLE
<TYP>	–	TYPICAL

U

UBC	–	UNIFORM BUILDING CODE
UOS	–	UNLESS OTHERWISE SPECIFIED
UG	–	UNDERGROUND
UTIL	–	UTILITY
UP	–	UTILITY POLE

V

V	–	VOLT
VC	–	VERTICAL CURVE
VCP	–	VITRIFIED CLAY PIPE
VERT	–	VERTICAL
VPI	–	VERTICAL POINT OF INTERSECTION

W

WM	–	WATER METER
WV	–	WATER VALVE

X

XFMR	–	TRANSFORMER

Y

YD	–	YARD
YD^2	–	SQUARE YARD
YD^3	–	CUBIC YARD

NOTES:

1. CONTACT THE ENGINEER FOR SYMBOLS NOT LISTED.
2. THIS IS A STANDARD SHEET, THEREFORE SOME SYMBOLS OR ABBREVIATIONS MAY APPEAR ON THIS SHEET WHICH DO NOT APPEAR ON THE PLANS.
3. SITE AND UTILITY SYMBOLS SHOWN ON THIS SHEET ARE NOT INTENDED TO REPRESENT THE PHYSICAL SCALE OR SHAPE OF ANY ITEMS. WHERE LARGE–SCALE PLANS ARE PRESENTED, THE SYMBOLS SHOWN HEREON MAY BE REPLACED BY DETAILS MORE SUITED TO THE DRAWING SCALE.

UTILITIES LEGEND

PROPOSED	EXISTING	
		GATE VALVE
	PV	PLUG VALVE
	BV	BALL VALVE
	BFV	BUTTERFLY VALVE
P	P	AUTOMATICALLY OPERATED VALVE (P= PNEUMATIC, E= ELECTRIC, S= SOLENOID, H=HYDRAULIC. D= DIAPHRAGM ACTUATOR)
		3–WAY VALVE
		GLOBE VALVE
		ANGLE VALVE
		PRESSURE REGULATING VALVE
		PRESSURE RELIEF VALVE
		CHECK VALVE
		AIR OR VACUUM RELEASE VALVE
AV	AV	AIR AND VACUUM VALVE
CA	CA	COMBINATION AIR VALVE
		FLOW METER
	NF	HOSE BIBB (NF=NON–FREEZE)
		REDUCER
		FIRE HYDRANT
		DROP INLET
MH	MH	MANHOLE
		CLEANOUT
UG E	UG E	UNDERGROUND ELECTRICAL
OH E	OH E	OVERHEAD ELECTRICAL
TV	TV	CABLE TELEVISION
J	J	JOINT UTILITIES
TM	TM	UNDERGROUND TELEMETRY LINE
OH TM	OH TM	OVERHEAD TELEMETRY LINE
T	T	UNDERGROUND TELEPHONE LINE
OH T	OH T	OVERHEAD TELEPHONE LINE
W	W	WATER LINE
SS	SS	SANITARY SEWER LINE
SD	SD	STORM DRAIN LINE
G	G	GAS LINE
FM	FM	FORCE MAIN AND DIRECTION OF FLOW
		CULVERT
		POLE MOUNTED STREETLIGHT
	NOT USED	ITEM TO BE REMOVED
	NOT USED	ITEM TO BE ABANDONED IN PLACE
WM	WM	WATER METER
PB	PB	PULL BOX AND DESIGNATION
R4–4		SIGN AND DESIGNATION
MB	MB	MAIL BOX

WATER LINE, SANITARY SEWER LINE: SIZE AND MATERIAL OF EXISTING PIPING KNOWN.

STORM DRAIN LINE, GAS LINE, FORCE MAIN: SIZE AND MATERIAL OF NEW PIPING MAY BE SHOWN ON PLAN OR IN PROFILE. MAY BE SHOWN WHEN KNOWN.

LINE DESIGNATION

2.0 — INDICATES LINE DESIGNATION

12 — INDICATES SHEET WHERE CONTINUATION OCCURS (REPLACED BY A LINE IF OCCURS ON SAME SHEET)

CURVE DATA

R (RADIUS)
L (LENGTH)
Δ (DELTA)
T (TANGENT)

TOPOGRAPHIC LEGEND

PROPOSED	EXISTING	
		P.V.I. (POINT OF VERTICAL INTERSECTION)
NOT USED		TEMPORARY BENCH MARK
NOT USED		BENCH MARK
47.55	NOT USED	FINISH GRADE ELEVATION
NOT USED	42.6	ELEVATION OF ORIGINAL GROUND
		RADIUS POINT
		FLOW LINE AND DIRECTION
		TOP OF CUT
		TOP OF FILL
		TOE OF CUT OR FILL
200	198	CONTOUR LINE
		CONCRETE
		PAVEMENT
NOT USED		ROCKS
NOT USED		STUMPS
		FIR TREES
		OAK TREES
		MADRONE TREES
		ROADS
JP	JP	UTILITY POLE (PP=POWER POLE, TP= TEL POLE, JP=JOINT POLE, LP=LIGHT POLE)
		GUY WIRE
		FENCE
		BOUNDARY LIMITS, W/DESIGNATION
		EASEMENT LINE
		CENTERLINE
NOT USED		MARSH
		LAWN
NOT USED		SPRING
TP–4	TP–4	TEST PIT AND DESIGNATION
		EXPLORATION BORE HOLE
		PROPERTY CORNER
		SURVEY MONUMENT
		CONTROL POINT
		DRIVEWAY

DETAIL AND SECTION DESIGNATION

SECTION (LETTER) OR DETAIL (NUMERAL) DESIGNATION — A

INDICATES SECTION OR DETAIL TAKEN AND SHOWN ON SAME SHEET — 15

ON DRAWING WHERE SECTION OR DETAIL IS TAKEN; SHEET NUMBER WHERE SHOWN

ON DRAWING WHERE SECTION OR DETAIL IS SHOWN; SHEET NUMBER WHERE TAKEN

STANDARD DETAIL NUMBER (DETAIL MAY BE SHOWN ON ANY SHEET WITHIN THE DRAWING SET) — 006

STATE OF CALIFORNIA · REGISTERED PROFESSIONAL ENGINEER · NATHAN KOHLER TOEWS · No. 70251 · Exp. 9/30/12 · CIVIL · 6-26-11

LACO ASSOCIATES
EUREKA · UKIAH · CONCORD
CONSULTING ENGINEERS
1-800-515-5054
WWW. LACOASSOCIATES.COM

NO.	REVISION	BY	CHK	DATE
	BID ADDENDUM 1	JDB	NKT	6/27/11
	100% SUBMITTAL	JDB	MAH	5/24/11
	PROGRESS SUBMITTAL #1	JDB	MAH	5/18/11
	75% SUBMITTAL	JDB	MAH	4/14/11
	DD SUBMITTAL	JDB	MAH	4/7/11

YUROK VETERANS CEMETERY
CIVIL ABBREVIATION AND LEGEND SHEET
BALD HILLS ROAD, HUMBOLDT COUNTY, CA
APN:531-094-005

SCALE	SCALE
DRAWN	JDB
CHECK	MAH
APPVD	MAH
DATE	4/7/11
JOB NO.	7105.03
SHEET	G2

Jun 28,2011–11:29am
I:\Gadhee\7100\7105 YUROK VETERANS CEMETERY\DWG\7105-03 CIV G2.dwg

REUSE OF DOCUMENTS: This document and the ideas and design incorporated herein, as an instrument of professional service, is the property of LACO Associates and shall not be reused in whole or part for any other project without LACO Associates written authorization.

GENERAL NOTES:

1. ALL CONSTRUCTION SHALL CONFORM TO THESE PLANS AND THE FOLLOWING STANDARDS:
   A. COUNTY OF HUMBOLDT IMPROVEMENT STANDARDS AND SPECIFICATIONS (LATEST REVISION)
   B. CALIFORNIA BUILDING CODE (CBC) (LATEST REVISION)
   C. AMERICAN PUBLIC WORKS ASSOCIATION (APWA) "STANDARD SPECIFICATION FOR PUBLIC WORKS CONSTRUCTION (GREEN BOOK)", (LATEST REVISION)
   D. CALIFORNIA STATE DEPARTMENT OF TRANSPORTATION (CALTRANS) STANDARD SPECIFICATIONS AND STANDARD PLANS (LATEST REVISION)
   E. AMERICAN WATER WORKS ASSOCIATION (AWWA) (LATEST REVISION)
   F. GEOTECHNICAL INVESTIGATION REPORT BY LACO ASSOCIATES DATED APRIL 6, 2011.
2. PUBLIC WORKS WILL OVERSEE CIVIL IMPROVEMENTS (CLASS A CONTRACTOR WORK) BUILDING DEPARTMENT WILL OVERSEE CONSTRUCTION OF BUILDING (CLASS B CONTRACTOR).
3. THE ENGINEER PREPARING THESE PLANS SHALL NOT BE RESPONSIBLE NOR LIABLE FOR ANY UNAUTHORIZED CHANGES TO, OR USES OF THESE PLANS. ALL CHANGES TO THE PLANS MUST BE IN WRITING AND MUST BE APPROVED BY THE PREPARER OF THESE PLANS.
4. THE CONTRACTOR SHALL AGREE TO DEFEND, INDEMNIFY, AND HOLD THE DESIGN PROFESSIONALS HARMLESS FROM ANY AND ALL LIABILITY, REAL OR ALLEGED, IN CONNECTION WITH THE PERFORMANCE OF WORK ON THIS PROJECT, EXCEPTING LIABILITY ARISING FROM THE SOLE NEGLIGENCE OF THE DESIGN PROFESSIONAL.
5. LOCATIONS AND ELEVATIONS OF EXISTING UNDERGROUND UTILITIES SHOWN HEREON ARE FROM RECORD INFORMATION ONLY AND ARE SHOWN FOR INFORMATION ONLY. THE CONTRACTOR SHALL BE RESPONSIBLE FOR LOCATING ALL UNDERGROUND UTILITIES PRIOR TO EXCAVATION AND CONSTRUCTION IN ANY AREA. CONTRACTOR SHALL CONTACT UNDERGROUND SERVICE ALERT (USA) AT 1-800-227-2600 A MINIMUM OF 48 HOURS IN ADVANCE OF ANY EXCAVATION. CONTRACTOR SHALL IMMEDIATELY REPORT ANY DISCREPANCIES IN RECORD INFORMATION TO THE ENGINEER OF RECORD PRIOR TO CONSTRUCTION OF ANY WORK.
6. THE CONTRACTOR SHALL ASSUME SOLE AND COMPLETE RESPONSIBILITY FOR THE JOB SITE CONDITIONS DURING THE COURSE OF PROJECT CONSTRUCTION, INCLUDING SAFETY OF ALL PERSONS AND PROPERTY. THIS REQUIREMENT SHALL APPLY CONTINUOUSLY AND IS NOT LIMITED TO NORMAL WORKING HOURS.
7. IT IS THE CONTRACTOR'S RESPONSIBILITY TO COMPLY WITH THE PERTINENT SECTIONS OF THE "CONSTRUCTION SAFETY ORDERS", MOST CURRENT REVISION, ISSUED BY THE STATE OF CALIFORNIA, AND ALL OSHA REQUIREMENTS AS THEY APPLY TO THIS PROJECT. THE DESIGN, ADEQUACY AND SAFETY OF ERECTION BRACING, SHORING, TEMPORARY SUPPORTS ETC., IS THE SOLE RESPONSIBILITY OF THE CONTRACTOR, AND HAS NOT BEEN CONSIDERED BY THE ENGINEER. THE CONTRACTOR SHALL BE RESPONSIBLE FOR ADEQUATE DESIGN AND CONSTRUCTION OF ALL FORMS AND SHORING REQUIRED.
8. CONTRACTOR SHALL OBTAIN ALL NECESSARY PERMITS.
9. CONTRACTOR SHALL PROTECT ALL EXISTING IMPROVEMENTS ON OR ADJACENT TO PROJECT SITE. CONTRACTOR SHALL REPAIR OR REPLACE ALL DAMAGE TO EXISTING IMPROVEMENTS TO THE SATISFACTION OF THE ENGINEER.
10. CONTRACTOR SHALL VERIFY CONDITIONS AND DIMENSIONS AT THE SITE BEFORE STARTING WORK AND IMMEDIATELY NOTIFY THE ENGINEER IF ANY CONDITIONS OR DIMENSIONS ARE UNUSUAL OR NOT AS SHOWN ON THESE PLANS.
11. DO NOT USE SCALED DIMENSIONS, USE WRITTEN DIMENSIONS. WHERE NO DIMENSIONS ARE SHOWN, CONSULT ENGINEER FOR CLARIFICATION BEFORE PROCEEDING WITH THE WORK.
12. DETAILS OF CONSTRUCTION NOT FULLY SHOWN SHALL BE OF THE SAME NATURE AS SHOWN FOR SIMILAR CONDITIONS.
13. CONTRACTOR SHALL PROVIDE MARKED UP DRAWINGS SHOWING "AS-BUILT" CONDITIONS FOR ALL DEVIATIONS FROM THE PLANS AS SHOWN HEREON, UPON COMPLETION OF CONSTRUCTION, AND PRIOR TO RELEASE OF FINAL PAYMENT.
14. UTILITIES REQUIRED FOR CONSTRUCTION WILL BE THE RESPONSIBILITY OF THE CONTRACTOR.
15. CONTRACTOR SHALL COORDINATE WITH ENGINEER FOR SETTING CURB AND HORIZONTAL AND VERTICAL CONTROL STAKES. THE ENGINEER WILL PROVIDE ONE SET OF STAKES. CONTRACTOR SHALL PROTECT ALL STAKES, ANY RESTAKING REQUIRED DUE TO LOST OR DAMAGED STAKES WILL BE AT THE EXPENSE OF THE CONTRACTOR.
16. CONTRACTOR SHALL REMOVE ALL DELETERIOUS MATERIAL FROM SITE GENERATED DURING CONSTRUCTION INCLUDING BUT NOT LIMITED TO BROKEN CONCRETE, STUMPS, ROCKS, DEBRIS, ASPHALT RUBBLE, AND GARBAGE, AND LEGALLY DISPOSE OF THE ABOVE.
17. THE CONTRACTOR SHALL BE RESPONSIBLE FOR ADEQUATE DESIGN AND CONSTRUCTION OF ALL FORMS AND SHORING.
18. ALL UNDERGROUND UTILITIES SHALL BE INSTALLED PRIOR TO CONSTRUCTION OR REPAIR OF STREET STRUCTURAL SECTION.
19. TRENCH SHORING SHALL BE IN ACCORDANCE WITH THE CAL-OSHA CONSTRUCTION SAFETY ORDERS, LATEST REVISION, WHERE REQUIRED.
20. CONTRACTOR SHALL NOTIFY ENGINEER A MINIMUM OF 48 HOURS IN ADVANCE OF QUALITY CONTROL INSPECTION TESTING.
21. THESE PLANS SHALL NOT BE CHANGED OR REUSED WITHOUT WRITTEN APPROVAL BY THE ENGINEER.
22. FIRE PROTECTION IS PROVIDED BY WEITCHPEC VOLUNTEER FIRE DEPARTMENT.
23. CONTRACTOR IS REQUIRED TO PROVIDE ALL NECESSARY CONSTRUCTION STAKING TO PERFORM THIS WORK.

GRADING NOTES:

1. INSPECTIONS AND TESTING:
   A. SITE GRADING, FILLING, AND BACKFILLING WILL BE INSPECTED BY, AND AT THE DISCRETION OF, THE ENGINEER.
   B. THE ENGINEER WILL MAKE COMPACTION TESTS WHEN DEEMED TO BE NECESSARY BY THE ENGINEER AND WHEN ADVISED BY THE CONTRACTOR THAT IN THE CONTRACTORS OPINION, SUFFICIENT DENSITIES HAVE BEEN ACHIEVED. THE CONTRACTOR SHALL FURNISH A BACKHOE AND OPERATOR UPON REQUEST, AT NO COST TO OWNER. THE CONTRACTOR SHALL GIVE THE ENGINEER AT LEAST 48 HOURS NOTICE THAT TESTS ARE REQUIRED. FAILURE TO GIVE ADEQUATE NOTICE CAN RESULT IN TESTING DELAYS WHICH WILL BE THE RESPONSIBILITY OF THE CONTRACTOR.
   C. THE CONTRACTOR SHALL MAKE ALL NECESSARY EXCAVATIONS FOR COMPACTION TESTS. COSTS OF EXCAVATION, BACKFILLING, AND COMPACTING IN CONNECTION WITH COMPACTION TESTING SHALL BE BORNE BY THE CONTRACTOR.
   D. A FAILING COMPACTION TEST INDICATES THAT THE REQUIRED COMPACTION STANDARDS HAVE NOT BEEN ACHIEVED. ANY FILL MATERIAL OR PORTION OF FILL MATERIAL THAT DOES NOT MEET THE SPECIFICATION REQUIREMENTS SHALL BE REMOVED AND RECOMPACTED UNTIL THE REQUIREMENTS ARE SATISFIED, AT NO ADDITIONAL COST TO THE OWNER.
   E. EXCAVATIONS FOR COMPACTION TESTS SHALL BE BACKFILLED WITH MATERIAL SIMILAR TO THAT EXCAVATED AND COMPACTED TO THE SPECIFIED DENSITY BY THE CONTRACTOR.
   F. ALL COSTS INVOLVED WITH ACHIEVING COMPACTION STANDARDS SHALL BE INCLUDED IN THE BID PRICES PAID FOR THE SPECIFIED BID ITEM INVOLVED AND THEREFOR NO ADDITIONAL COMPENSATION SHALL BE MADE.
2. SITE MATERIALS
   A. MATERIAL OBTAINED FROM THE PROJECT SITE WILL BE SUITABLE FOR USE AS NON STRUCTURAL AND BURIAL SITE FILL OR BACKFILL MATERIALS UNLESS OTHERWISE SHOWN ON THESE PLANS AND PROVIDING SAID MATERIAL MEETS THE CONDITIONS AS PROVIDED HEREIN. AND AS OUTLINED IN THE PROJECTS GEOTECHNICAL REPORT. UNSUITABLE FILL MATERIAL SHALL BE REMOVED FROM SITE AND DISPOSED OF AT AN APPROVED LOCATION. NATIVE MATERIAL USED AS BACKFILL SHALL BE FREE FROM ORGANIC MATERIAL, RUBBISH, DEBRIS, AND OTHER OBJECTIONABLE MATERIALS. HOWEVER, ROCKS, BOULDERS, BROKEN CONCRETE, AND BITUMINOUS TYPE PAVEMENT OBTAINED FROM THE PROJECT EXCAVATIONS WILL BE PERMITTED IN THE BACKFILL OF FILL WITH THE FOLLOWING LIMITATIONS:
      a. THE MAXIMUM DIMENSION OF ANY PIECE USED SHALL BE 3 INCHES.
      b. "NESTING" OF PIECES WILL NOT BE PERMITTED.
3. PROTECTION
   A. PROVIDE FOR SURFACE DRAINAGE DURING THE PERIOD OF CONSTRUCTION IN A MANNER THAT AVOIDS CREATING A NUISANCE TO ADJACENT AREA. KEEP ALL EXCAVATION FREE OF WATER DURING THE ENTIRE PROGRESS OF THE WORK, REGARDLESS OF THE CAUSE, SOURCE OR NATURE OF THE WATER. THE CONTRACTOR SHALL PREVENT EROSION OF FRESHLY GRADED AREAS DURING CONSTRUCTION UNTIL SUCH TIME AS PERMANENT DRAINAGE AND EROSION CONTROL MEASURES HAVE BEEN CONSTRUCTED.
   B. WATERING: THE CONTRACTOR SHALL CONFORM TO CALTRANS STANDARD SPECIFICATION SECTION 17 AND WITH SECTION 1590(E) OF CAL OSHA, TITLE 8. WHERE DAMAGE OCCURS TO ADJACENT AREA OR OFFSITE PROPERTY, AS A RESULT OF DUST FROM THE WORK, THE CONTRACTOR SHALL PROMPTLY CORRECT, CLEAN OR OTHERWISE REPAIR SUCH DAMAGE AT NO ADDITIONAL COST, TO THE SATISFACTION OF THE OWNER.
   C. BENCHMARKS, MONUMENTS, SIGNS, AND OTHER REFERENCE POINTS SHALL BE MAINTAINED BY THE CONTRACTOR, AS DIRECTED BY OWNER, AT NO ADDITIONAL COST TO THE OWNER.
4. COMPACTION - GENERAL
   A. COMPACTION REQUIREMENTS AS SPECIFIED WILL BE BY PERCENT OF THE MAXIMUM WET DENSITY AND AS DETERMINED PER CALTRANS STANDARD SPECIFICATIONS CAL 216 AND CAL 231.
   B. IN PAVED AND SHOULDER AREAS, SUBGRADE WITHIN 30 INCHES OF FINAL GRADE SHALL BE COMPACTED TO 95% AND BACKFILLS AND FILLS MORE THAN 30 INCHES BELOW FINAL GRADE SHALL BE COMPACTED TO 90%.
   C. IN NON-PAVED AREAS, BACKFILLS AND FILLS SHALL BE COMPACTED TO 90%.
   D. PLACE BACKFILL AND FILL SOIL MATERIALS IN LOOSE LIFTS OF NOT MORE THAN 8 INCHES FOR MATERIAL COMPACTED BY HEAVY COMPACTION EQUIPMENT, AND NOT MORE THAN 6 INCHES FOR MATERIAL COMPACTED BY HAND-OPERATED TAMPERS.
   E. THE GROUND SURFACE IN AREAS TO RECEIVE FILL SHALL BE PREPARED AS FOLLOWS:
      a. ALL ORGANIC MATERIAL AND TOPSOIL SHALL BE REMOVED.
      b. ON SLOPES GREATER THAN 1V:4H, HORIZONTAL BENCHES SHALL BE CUT INTO THE SOIL TO PROVIDE LEVEL BEARING SURFACE FOR THE FILL MATERIAL. THE MINIMUM WIDTH OF THE BENCHES SHALL BE FOUR FEET.
   F. CUT SLOPES SHALL NOT EXCEED 1V:2H UNLESS OTHERWISE NOTED ON PLANS AND GEOTECHNICAL REPORT.
5. TRENCH COMPACTION
   A. COMPACTION REQUIREMENTS AS SPECIFIED WILL BE BY PERCENT OF THE MAXIMUM WET DENSITY AND AS DETERMINED PER CALTRANS STANDARD SPECIFICATIONS CAL 216 AND CAL 231.
   B. SEE TRENCH DETAILS ON THESE PLANS FOR TRENCH COMPACTION STANDARDS.
   C. TRENCHES WILL BE TESTED EVERY 50-75 LINEAR FEET WITH A MINIMUM OF TWO TESTS PER ANY LENGTH OF TRENCHING. THE ENGINEER WILL BE PERMITTED TO COMPLETE TESTING AT ANY BACKFILL ELEVATION DURING THE BACKFILLING PROCESS. THE CONTRACTOR SHALL PROVIDE EQUIPMENT AND AN OPERATOR, FREE OF CHARGE, TO THE ENGINEER TO GAIN ACCESS TO BACKFILLED ELEVATIONS FOR TESTING. A FAILING COMPACTION TEST INDICATES THAT THE REQUIRED COMPACTION STANDARDS HAVE NOT BEEN ACHIEVED.
   D. FILL MATERIALS SHALL BE MECHANICALLY COMPACTED, JETTING WILL NOT BE ALLOWED.
   E. CARE SHALL BE TAKEN NOT TO CRUSH THE PIPE OR OTHER COMPONENTS WITH COMPACTION EQUIPMENT.
6. EARTHWORK AND GRADING SHALL BE IN ACCORDANCE WITH CBC.
7. ALL IMPROVEMENTS SHALL BE GRADED TO DRAIN TO THE PUBLIC STREET OR APPROVED DRAINAGE COURSE AT A UNIFORM SLOPE, 1% MINIMUM, IN ACCORDANCE WITH THE RECOMMENDATIONS OF THE PROJECT SOILS REPORT, UNLESS NOTED OTHERWISE ON THE PLANS.
8. DURING CONSTRUCTION AND UPON COMPLETION OF ALL GRADING, CONTRACTOR SHALL PROVIDE EROSION CONTROL MEASURES IN ACCORDANCE WITH THESE PLANS.
9. CUT AND FILL SLOPES TO BE MAXIMUM OF 2:1 UNLESS OTHERWISE SHOWN ON PLANS.

YUROK TRIBE GENERAL UTILITY CONSTRUCTION NOTES:

1. ALL MATERIAL, WORKMANSHIP AND CONSTRUCTION DETAILS SHALL CONFORM TO THE TRIBE'S WATER AND SEWER DESIGN AND CONSTRUCTION STANDARDS INCLUDING ALL ADDENDA, STANDARD PLAN REVISIONS AND SPECIAL PROVISIONS.
2. THE CONSTRUCTION CONTRACTOR WILL BE REQUIRED TO ASSUME SOLE AND COMPLETE RESPONSIBILITY FOR JOB SITE CONDITIONS DURING THE COURSE OF CONSTRUCTION OF THE PROJECT, INCLUDING SAFETY OF ALL PERSONS AND PROPERTY; THIS REQUIREMENT SHALL BE MADE TO APPLY CONTINUOUSLY AND NOT BE LIMITED TO NORMAL WORKING HOURS; AND CONSTRUCTION CONTRACTOR SHALL AGREE TO DEFEND, INDEMNIFY AND HOLD DISTRICT AND DISTRICT ENGINEER HARMLESS FROM ANY AND ALL LIABILITY, EXCEPTING LIABILITY ARISING FROM THE SOLE NEGLIGENCE OF THE DESIGN PROFESSIONAL OR DISTRICT.
3. THE CONTRACTOR IS RESPONSIBLE FOR CONTACTING UNDERGROUND SERVICE ALERT, IN ADVANCE, OF ALL APPLICABLE EXCAVATIONS IN ACCORDANCE WITH THE LAW. TOLL FREE NUMBER IS 1-800-227-2600.
4. THE CONTRACTOR SHALL SECURE A TRENCH PERMIT FROM THE CALIFORNIA DIVISION OF INDUSTRIAL SAFETY PRIOR TO EXCAVATION ANY TRENCH OVER 5 FEET IN DEPTH.
5. THE CONTRACTOR SHALL PROVIDE ALL THE NECESSARY EQUIPMENT, LABOR AND MATERIAL REQUIRED FOR SHEETING, SHORING, AND BRACING FOR THE PROTECTION OF LIFE AND LIMB WHICH SHALL CONFORM TO THE INDUSTRIAL SAFETY ORDER. NOTHING IN THESE SPECIFICATIONS SHALL BE CONSTITUTED TO IMPOSE TORT LIABILITY ON THE DISTRICT.
6. THE CONTRACTOR SHALL COORDINATE ALL WATER AND SEWER MAIN CONNECTION WORK WITH THE TRIBE AND SHALL GIVE PROPER NOTICE.
7. ALL TRENCHING, BACKFILL AND RESURFACING REQUIRED FOR INSTALLATION WATER SYSTEM AND SEWER SYSTEM FACILITIES SHALL BE PER TRIBAL STANDARD DETAILS AND COUNTY ENCROACHMENT PERMIT REQUIREMENTS.
8. MINIMUM DEPTH OF COVER FROM FINISHED GRADE FOR WATER MAINS SHALL BE 36".
9. No. 12 COATED COPPER WIRE SHALL BE LAID ON TOP OF AND ALONG ENTIRE LENGTH OF ALL NON-METALLIC MAINS AND SHALL BE EXTENDED TO THE SURFACE AT ALL VALVE LOCATIONS, BLOW OFFS, METER BOXES, MANHOLES, AND CLEANOUTS SUFFICIENTLY FOR LOCATOR EQUIPMENT TO BE ATTACHED. TRACER WIRE SHALL BE INSTALLED ON ALL SERVICES NOT PERPENDICULAR TO THE MAIN. FASTEN THE WIRE TO THE TOP OF THE PIPE SO AS NOT TO BE DISPLACED BY BACKFILLING PROCEDURE (ONE METHOD OF ACCOMPLISHING THIS IS TO AFFIX THE WIRE TO THE TOP OF THE PIPE WITH DUCT TAPE AT APPROXIMATELY 10 FEET INTERVALS).
10. WATER MAINS TO BE CONSTRUCTED WITHIN 10' OF SEWER PIPE REQUIRE SPECIAL INSTALLATION AND DESIGN MUST BE SPECIFICALLY APPROVED BY THE TRIBE.
11. PRIVATE WATER AND SEWER SERVICE LATERAL BEYOND THE PUBLIC RIGHT OF WAY SHALL CONFORM TO SECTION 1108 OF THE UNIFORM PLUMBING CODE INCLUDING (A) THE BOTTOM OF THE WATER PIPE, AT ALL POINTS, SHALL BE AT LEAST 12 INCHES ABOVE THE TOP OF THE SEWER LATERAL AND (B) THE WATER PIPE SHALL BE PLACED ON A SOLID SHELF EXCAVATED TO ONE SIDE OF THE COMMON TRENCH WITH A MINIMUM CLEAR HORIZONTAL DISTANCE OF AT LEAST 12 INCHES FROM THE SEWER LATERAL.
12. UPON COMPLETION OF CONSTRUCTION, FINAL CONNECTION WILL BE MADE BY THE CONTRACTOR AT THE DEVELOPER'S EXPENSE UNDER INSPECTION BY THE TRIBE'S INSPECTOR, UNLESS OTHERWISE SPECIFIED ON THE PLANS.
13. AFTER A STREET HAS BEEN OVERLAID, ALL UTILITY STRUCTURES WILL BE MARKED IN WHITE PAINT OR "DIMPLE" ASPHALT BEFORE THE CLOSE OF THAT WORK DAY.
14. WITHIN 5 DAYS OF PAVING, ALL UTILITY STRUCTURES AND BOXES WILL BE BROUGHT TO GRADE AND INSPECTED.

PAVING NOTES:

1. ALL ASPHALT CONCRETE SHALL BE INSTALLED IN ACCORDANCE WITH CALTRANS STANDARD SPECIFICATIONS SECTION 39.
2. EXISTING PAVEMENT TRANSITIONS TO NEW PAVING SHALL BE SAWCUT TO SMOOTH LINES.
3. APPLY TACK COAT TO CONTACT SURFACES OF CURBS, GUTTERS AND EXISTING PAVEMENT.
4. PLACE ASPHALT CONCRETE WITHIN 24 HOURS OF APPLYING PRIMER OR TACK COAT.
5. ASPHALT CONCRETE SHALL BE CALTRANS TYPE B; 1/2" MAXIMUM, MEDIUM; WITH PG-6416 GRADE BINDER OR EQUIVALENT WITH APPROVAL OF ENGINEER.
6. COMPACT PAVEMENT BY ROLLING TO A MINIMUM OF 95% OF MAXIMUM DENSITY. DO NOT DISPLACE OR EXTRUDE PAVEMENT FROM POSITION. HAND COMPACT IN AREAS INACCESSIBLE TO MECHANICAL ROLLING EQUIPMENT.
7. PERFORM ROLLING WITH CONSECUTIVE PASSES TO ACHIEVE EVEN AND SMOOTH FINISH WITHOUT ROLLER MARKS.
8. PAVEMENT MARKINGS: PERVO PLUS 7000 SERIES OR EQUIVALENT WITH ENGINEER'S APPROVAL. APPLY PRODUCTS IN ACCORDANCE WITH MANUFACTURER'S INSTRUCTIONS.

ACCESSIBILITY:

1. HANDICAPPED ACCESSIBLE PARKING SPACES TO BE STRIPED, MARKED AND SIGNED PER AMERICANS WITH DISABILITIES ACT STANDARDS.
2. HANDICAP RAMPS SHALL BE IN ACCORDANCE WITH AMERICANS WITH DISABILITIES ACT STANDARDS.

NON STRUCTURAL CONCRETE NOTES:

1. CONCRETE MIX DESIGN AND TESTING SHALL MEET THE REQUIREMENTS OF SECTIONS 1903, 1904, AND 1905 OF THE 2010 CBC AND THESE SPECIFICATIONS. MIX DESIGNS SHALL BE SUBMITTED TO THE ENGINEER FOR APPROVAL PRIOR TO CONCRETE PLACEMENT.
2. CONCRETE SHALL BE HARDROCK CONCRETE AND SHALL MEET THE FOLLOWING DESIGN CRITERIA:
   A. MINIMUM 28-DAY COMPRESSIVE STRENGTH....2500 PSI
   B. MINIMUM CEMENT CONTENT....................5 SACKS/YD
   C. MAXIMUM AGGREGATE SIZE....................1"
   D. SLUMP...4"±1"
3. CONCRETE SHALL BE MIXED, PLACED, AND CURED IN ACCORDANCE WITH ACI 318-95, CHAPTERS 3, 4 AND 5.
4. REINFORCING SHALL BE PLACED IN ACCORDANCE WITH THE CONCRETE REINFORCING STEEL INSTITUTE (CRSI) "MANUAL OF STANDARD PRACTICE".
5. CONCRETE SHALL NOT BE DROPPED THROUGH REINFORCING STEEL (AS IN WALLS) SO AS TO CAUSE SEGREGATION OF AGGREGATES. IN SUCH CASES, HOPPERS AND VERTICAL CHUTES SHALL BE USED TO PLACE CONCRETE AS CLOSE AS POSSIBLE TO ITS FINAL POSITION IN THE STRUCTURE. THE CONCRETE SHALL BE PLACED SUCH THAT THE SURFACE REMAINS LEVEL AT ALL TIMES.
6. UNLESS OTHERWISE NOTED, THE SURFACE OF THE CONCRETE AT HORIZONTAL CONSTRUCTION JOINTS SHALL BE PRESSURE WASHED OR MECHANICALLY BRUSHED A MINIMUM OF 24 HOURS AND A MAXIMUM OF 72 HOURS AFTER THE CONCRETE IS PLACED. THE CLEANING SHALL BE SUFFICIENT TO EXPOSE CLEAN, SOLIDLY EMBEDDED AGGREGATE. SEE PLANS AND DETAILS FOR LOCATION AND TYPE OF CONSTRUCTION JOINT.
7. ALL ITEMS TO BE CAST IN CONCRETE SUCH AS REINFORCING DOWELS, BOLTS, ANCHORS, PIPES AND SLEEVES SHALL BE SECURELY POSITIONED IN FORMS BEFORE PLACEMENT OF CONCRETE.

CONCRETE MASONRY NOTES:

1. CONCRETE MASONRY UNITS SHALL BE STANDARD WEIGHT BLOCKS CONFORMING TO ASTM C90 ($f'm$=1500psi), LAID TO COMMON BOND IN TYPE M MORTAR.
2. ALL CELLS SHALL BE FULLY GROUTED.
3. GROUT FOR PUMPING SHALL HAVE A FLUID CONSISTENCY AND SHALL CONTAIN NOT LESS THAN SEVEN SACKS OF CEMENT IN EACH CUBIC YARD. GROUT SHALL DEVELOP A MINIMUM COMPRESSIVE STRENGTH OF 2000psi AT 28 DAYS.
4. CONCRETE MASONRY UNITS SHALL BE ALIGNED TO CREATE UNOBSTRUCTED VERTICAL FLUES FOR GROUTING.
5. WHERE UNITS ARE LAID TO A MAXIMUM OF FOUR FEET HIGH, NO CLEANOUTS ARE REQUIRED. UNITS LAID TO A HEIGHT GREATER THAN FOUR FEET SHALL BE PROVIDED WITH CLEANOUTS.
6. SPECIAL INSPECTION IS NOT REQUIRED.

REINFORCING STEEL NOTES:

1. REINFORCING GRADES FOR CONCRETE AND MASONRY:
   A. ALL BARS EXCEPT THOSE TO BE WELDED.......ASTM A615 GRADE 60
   B. TIES AND STIRRUPS..ASTM A615 GRADE 40
   C. WELDED WIRE FABRIC.....................................ASTM A185
   D. ALL BARS TO BE WELDED:
      i. ASTM A706, GRADE 60, OR
      ii. ASTM A615, GRADE 60 PROVIDED THE CARBON EQUIVALENT FOR #7 BARS AND LARGER SHALL NOT BE GREATER THAN 0.45%, AND FOR #6 BARS AND SMALLER SHALL NOT BE GREATER THAN 0.55%, OR ASTM A615. GRADE 60 PROVIDED THE CARBON EQUIVALENT FOR ALL BARS BE LESS THAN 0.75%, AND SPECIAL PRE-HEAT, WELDER CERTIFICATION AND CONTINUOUS INSPECTION BY A QUALIFIED LABORATORY BE PERFORMED TO AWS REQUIREMENTS.
2. WELDING OF REINFORCING BARS SHALL BE PERFORMED IN ACCORDANCE WITH AWS D1.4 (CBC STD 26-8).
   A. REINFORCING TO BE WELDED:
      i. ASTM A36 STEEL TO REBAR...........................E70XX ELECTRODES
      ii. ASTM A50 STEEL OR STRONGER TO REBAR....E90XX ELECTRODES
      iii. REBAR TO REBAR...E90XX ELECTRODES
3. STEEL SHALL BE KEPT CLEAN AND FREE OF RUST.
4. SHOP DRAWINGS SHALL BE SUBMITTED TO THE ENGINEER PRIOR TO FABRICATION AND DELIVERY OF REINFORCING STEEL.
5. SPLICES IN CONTINUOUS REINFORCING AS USED IN WALLS, WALL FOOTINGS, ETC., SHALL HAVE CLASS "B" LAP SPLICES (18" MIN) AND SPLICES IN ADJACENT BARS SHALL BE NOT LESS THAN 60" APART. VERTICAL WALL BARS SHALL BE SPLICED AT OR NEAR FLOOR LINES. BARS SHALL BE WIRED TOGETHER AT SPLICES OR LAPS, EXCEPT FOR TOP REINFORCING OF BEAMS AND SLABS OR WHERE DEFINITELY DETAILED TO BE SEPARATED. SEE BEAM DETAILS OR SCHEDULES FOR SEPARATION OF BEAM OR GIRDER BARS OVER SUPPORTS. WELDED WIRE FABRIC SHALL BE LAPPED 12" MINIMUM.
6. REINFORCEMENT PROTECTION:
   A. CONCRETE POURED AGAINST EARTH...................3"
   B. CONCRETE PLACED IN FORMS, BUT EXPOSED TO WEATHER OR EARTH:
      i. IF BARS ARE LARGER THAN #5..............3"
      ii. IF BARS ARE #5 OR SMALLER..............1-1/2"
   C. COLUMNS, GIRDERS, AND BEAMS......................1-1/2"
   D. INTERIOR WALLS AND SLABS........................1-1/2"
   E. STRUCTURAL SLABS ON GRADE.......................2" FROM BOTTOM AND 1" FROM TOP
   F. NON-STRUCTURAL SLABS ON GRADE..................2" FROM TOP
7. EACH REINFORCING BAR SHALL BE WIRED TO A CROSS BAR AT A MAXIMUM SPACING OF 24"
8. ALL REINFORCING BARS SHALL BE TERMINATED IN LAPS, 90 DEGREE BENDS, OR WITH DOWELS INTO (E) CONCRETE. BEND TOP FOOTING BARS DOWN TO BOTTOM STEEL. BEND BOTTOM FOOTING BARS UP WITH STANDARD 90 DEGREE BENDS. PROVIDE DOWELS INTO WALLS OF THE SAME SIZE AND SPACING AS WALL VERTICAL REINFORCEMENT. REINFORCING STEEL MAY LAP WITH COUPLERS WHICH ARE 125% OF BAR STRENGTH. AN ICBO REPORT MUST BE SUBMITTED FOR COUPLERS.
9. DETAIL BARS IN ACCORDANCE WITH ACI DETAILING MANUAL, 1994. PROVIDE ALL ACCESSORIES NECESSARY TO SUPPORT REINFORCING STEEL IN THE POSITIONS SHOWN ON THE PLANS.
10. ALL DOWELS, ANCHOR BOLTS, AND OTHER HARDWARE TO BE SET IN CONCRETE SHALL BE TIED IN PLACE PRIOR TO PLACEMENT OF CONCRETE.

LANDSCAPING:

1. (NOTES REMOVED - SEE PLANTING PLAN)
2. "
3. "
4. "
5. CONTRACTOR SHALL PROVIDE TWO (2) CAST CONCRETE GARBAGE RECEPTACLES CAPABLE OF HOUSING A STANDARD 30 GALLON GARBAGE CAN. RECEPTACLES SHALL HAVE A DURABLE RAIN PROTECTION COVER. AND BE LOCKABLE. EACH RECEPTACLE SHALL HAVE AND ARCHITECTURAL TREATMENT CONSISTENT WITH THE THEME OF THE CEMETERY. SUBMIT AT LEAST THREE (3) ALTERNATIVE RECEPTACLE DESIGNS FOR REVIEW BY THE ENGINEER AND OWNER AND APPROVAL BY OWNER.

REGISTERED PROFESSIONAL ENGINEER
NATHAN KOHLER TORKIN
No. 70251
Exp. 9/30/12
6-26-11
CIVIL
STATE OF CALIFORNIA

LACO ASSOCIATES
EUREKA · UKIAH · CONCORD
CONSULTING ENGINEERS
1-800-515-5054
WWW. LACOASSOCIATES.COM

NO.	REVISION	BY	CHK	DATE
	BID ADDENDUM 1	JDB	NKT	6/27/11
	100% SUBMITTAL	JDB	MAH	5/24/11
	PROGRESS SUBMITTAL #1	JDB	MAH	5/18/11
	75% SUBMITTAL	JDB	MAH	4/14/11
	DD SUBMITTAL	JDB	MAH	4/7/11

YUROK VETERANS CEMETERY
CONSTRUCTION NOTES
BALD HILLS ROAD, HUMBOLDT COUNTY, CA
APN:531-094-005

SCALE	SCALE
DRAWN	JDB
CHECK	MAH
APPVD	MAH
DATE	4/7/11
JOB NO.	7105.03
SHEET	G3

Jun 28,2011-11:35am
T:\Cadfiles\7100\7105 YUROK VETERANS CEMETERY\DWG\ 7105-03 CIV G3.dwg

REUSE OF DOCUMENTS: This document and the ideas and design incorporated herein, as an instrument of professional service, is the property of LACO Associates and shall not be reused in whole or part for any other project without LACO Associates written authorization.

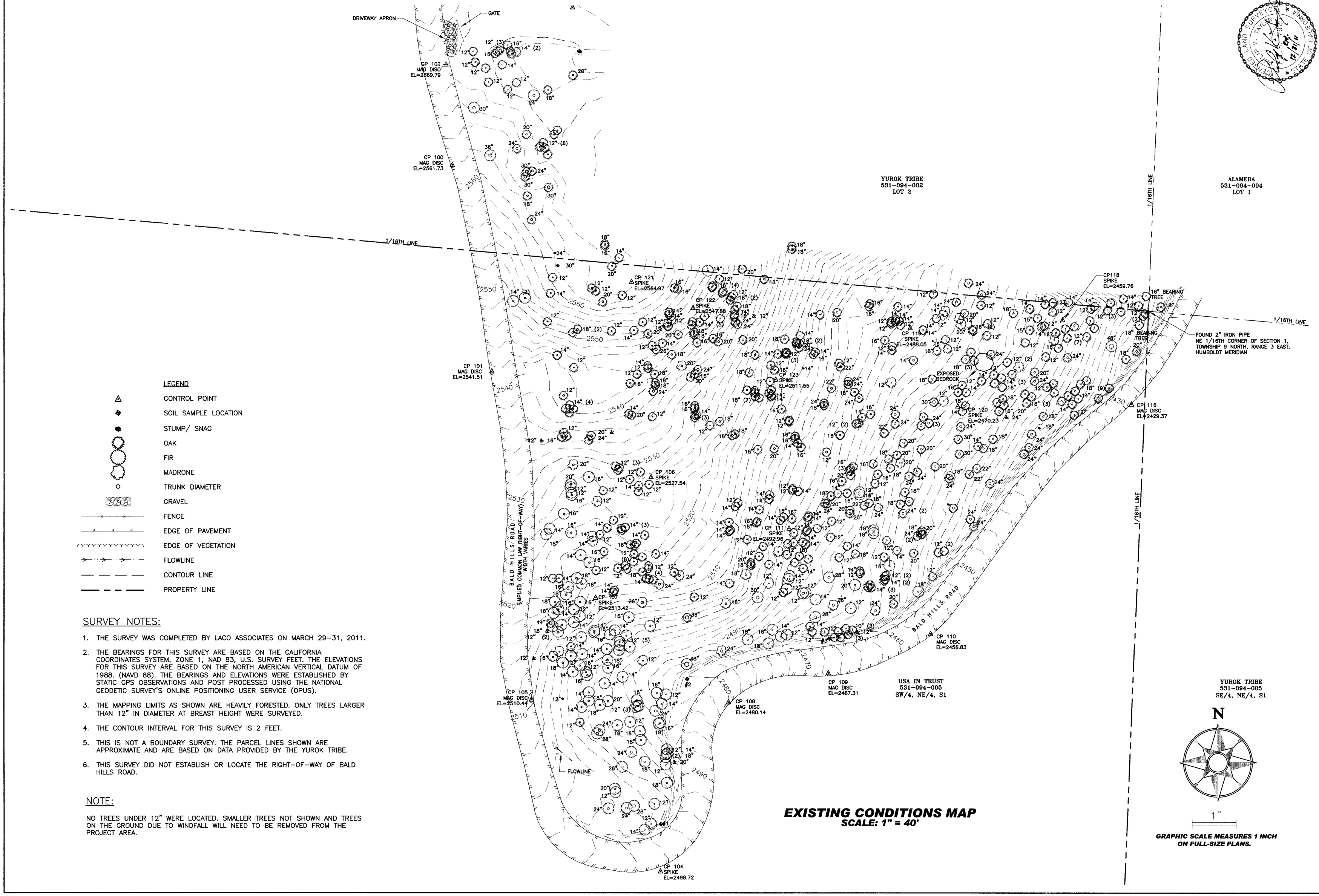

LEGEND

- CONTROL POINT
- SOIL SAMPLE LOCATION
- STUMP/ SNAG
- OAK
- FIR
- MADRONE
- TRUNK DIAMETER
- GRAVEL
- FENCE
- EDGE OF PAVEMENT
- EDGE OF VEGETATION
- FLOWLINE
- CONTOUR LINE
- PROPERTY LINE

SURVEY NOTES:

1. THE SURVEY WAS COMPLETED BY LACO ASSOCIATES ON MARCH 29–31, 2011.
2. THE BEARINGS FOR THIS SURVEY ARE BASED ON THE CALIFORNIA COORDINATES SYSTEM, ZONE 1, NAD 83, U.S. SURVEY FEET. THE ELEVATIONS FOR THIS SURVEY ARE BASED ON THE NORTH AMERICAN VERTICAL DATUM OF 1988. (NAVD 88). THE BEARINGS AND ELEVATIONS WERE ESTABLISHED BY STATIC GPS OBSERVATIONS AND POST PROCESSED USING THE NATIONAL GEODETIC SURVEY'S ONLINE POSITIONING USER SERVICE (OPUS).
3. THE MAPPING LIMITS AS SHOWN ARE HEAVILY FORESTED. ONLY TREES LARGER THAN 12" IN DIAMETER AT BREAST HEIGHT WERE SURVEYED.
4. THE CONTOUR INTERVAL FOR THIS SURVEY IS 2 FEET.
5. THIS IS NOT A BOUNDARY SURVEY. THE PARCEL LINES SHOWN ARE APPROXIMATE AND ARE BASED ON DATA PROVIDED BY THE YUROK TRIBE.
6. THIS SURVEY DID NOT ESTABLISH OR LOCATE THE RIGHT-OF-WAY OF BALD HILLS ROAD.

NOTE:

NO TREES UNDER 12" WERE LOCATED. SMALLER TREES NOT SHOWN AND TREES ON THE GROUND DUE TO WINDFALL WILL NEED TO BE REMOVED FROM THE PROJECT AREA.

EXISTING CONDITIONS MAP
SCALE: 1" = 40'

LACO ASSOCIATES
EUREKA · UKIAH · CONCORD
CONSULTING ENGINEERS
1-800-515-5054
WWW.LACOASSOCIATES.COM

NO.	REVISION	BY	CHK	DATE
	BID ADDENDUM 1	JDB	NKT	6/27/11
	100% SUBMITTAL	JDB	MAH	5/24/11
	PROGRESS SUBMITTAL #1	JDB	MAH	5/18/11
	75% SUBMITTAL	JDB	MAH	4/14/11
	DD SUBMITTAL	JDB	MAH	4/7/11

YUROK VETERANS CEMETERY
TOPOGRAPHIC SURVEY

BALD HILLS ROAD, HUMBOLDT COUNTY, CA
APN:531-094-005

SCALE	SCALE
DRAWN	JDB
CHECK	MAH
APPVD	MAH
DATE	4/7/11
JOB NO.	7105.03
SHEET	C1

Jun 28,2011-11:44am
T:\Cadfiles\7100\7105 YUROK VETERANS CEMETERY\DWG\ 7105-03 CIV C2.dwg

REUSE OF DOCUMENTS: This document and the ideas and designs incorporated herein, as an instrument of professional service, is the property of LACO Associates and shall not be reused in whole or part for any other project without LACO Associates written authorization.

1/16 TH LINE

TRIBAL FEE LANDS / TRIBAL TRUST LANDS

TREE TO BE REMOVED, TYP

BALD HILLS ROAD

EXPOSED BEDROCK

1/16 TH LINE

DEMOLITION PLAN
SCALE: 1" = 40'

LEGEND:

- FIR TREE TO REMAIN
- OAK TREE TO REMAIN
- MADRONE TREE REMAIN
- FIR TREE TO BE REMOVED
- OAK TREE TO BE REMOVED
- MADRONE TREE TO BE REMOVED

NOTE:

NO TREES UNDER 12" WERE LOCATED. SMALLER TREES NOT SHOWN AND TREES ON THE GROUND WILL NEED TO BE REMOVED FROM THE PROJECT AREA.

GRAPHIC SCALE MEASURES 1 INCH ON FULL-SIZE PLANS.

1"

N

SCALE	AS SHOWN
DRAWN	JDB
CHECK	MAH
APPVD	MAH
DATE	4/7/11
JOB NO.	7105.03
SHEET	C2

YUROK VETERANS CEMETERY
DEMOLITION PLAN

BALD HILLS ROAD, HUMBOLDT COUNTY, CA
APN:531-094-005

NO.	REVISION	BY	CHK	DATE
	BID ADDENDUM 1	JDB	NKT	6/27/11
	100% SUBMITTAL	JDB	MAH	5/24/11
	PROGRESS SUBMITTAL #1	JDB	MAH	5/18/11
	75% SUBMITTAL	JDB	MAH	4/14/11
	DD SUBMITTAL	JDB	MAH	4/7/11

LACO ASSOCIATES
EUREKA · UKIAH · CONCORD
CONSULTING ENGINEERS
1-800-515-5054
WWW. LACOASSOCIATES.COM

REGISTERED PROFESSIONAL ENGINEER
NATHAN KOHLER JOESTING
No. 70251
Exp. 9/30/12
6-26-11
CIVIL
STATE OF CALIFORNIA

REUSE OF DOCUMENTS: This document and the ideas and design incorporated herein, as an instrument of professional service, is the property of LACO Associates and shall not be reused in whole or part for any other project without LACO Associates written authorization.

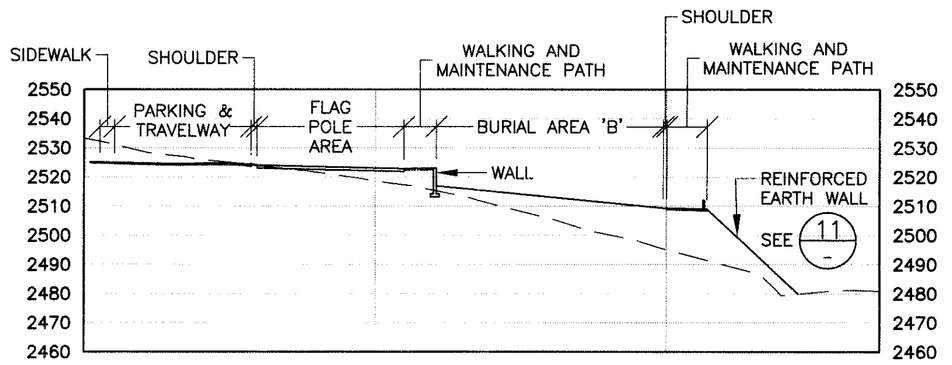

D/- SECTION

1" = 40' HORZ. AND VERT.

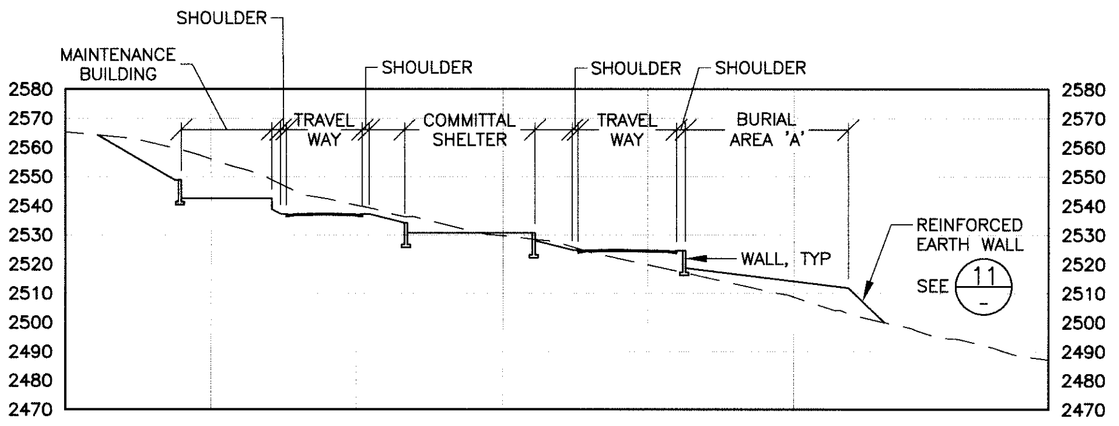

E/- SECTION

1" = 40' HORZ. AND VERT.

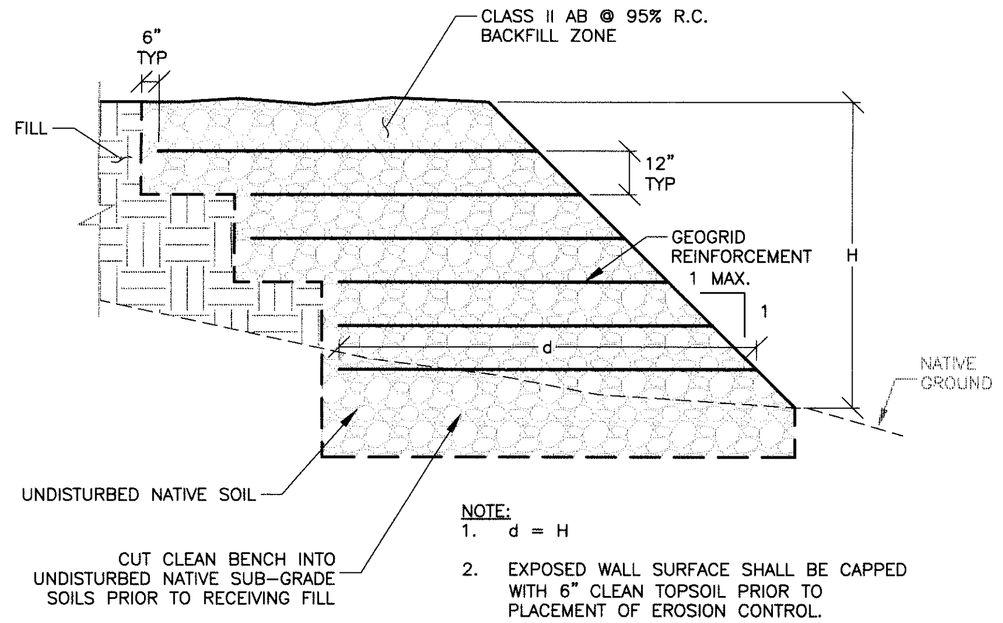

NOTE:
1. d = H
2. EXPOSED WALL SURFACE SHALL BE CAPPED WITH 6" CLEAN TOPSOIL PRIOR TO PLACEMENT OF EROSION CONTROL.
3. FILL SHALL BE PLACED IN 6" LIFTS.

11/- REINFORCED EARTH WALL

N.T.S.

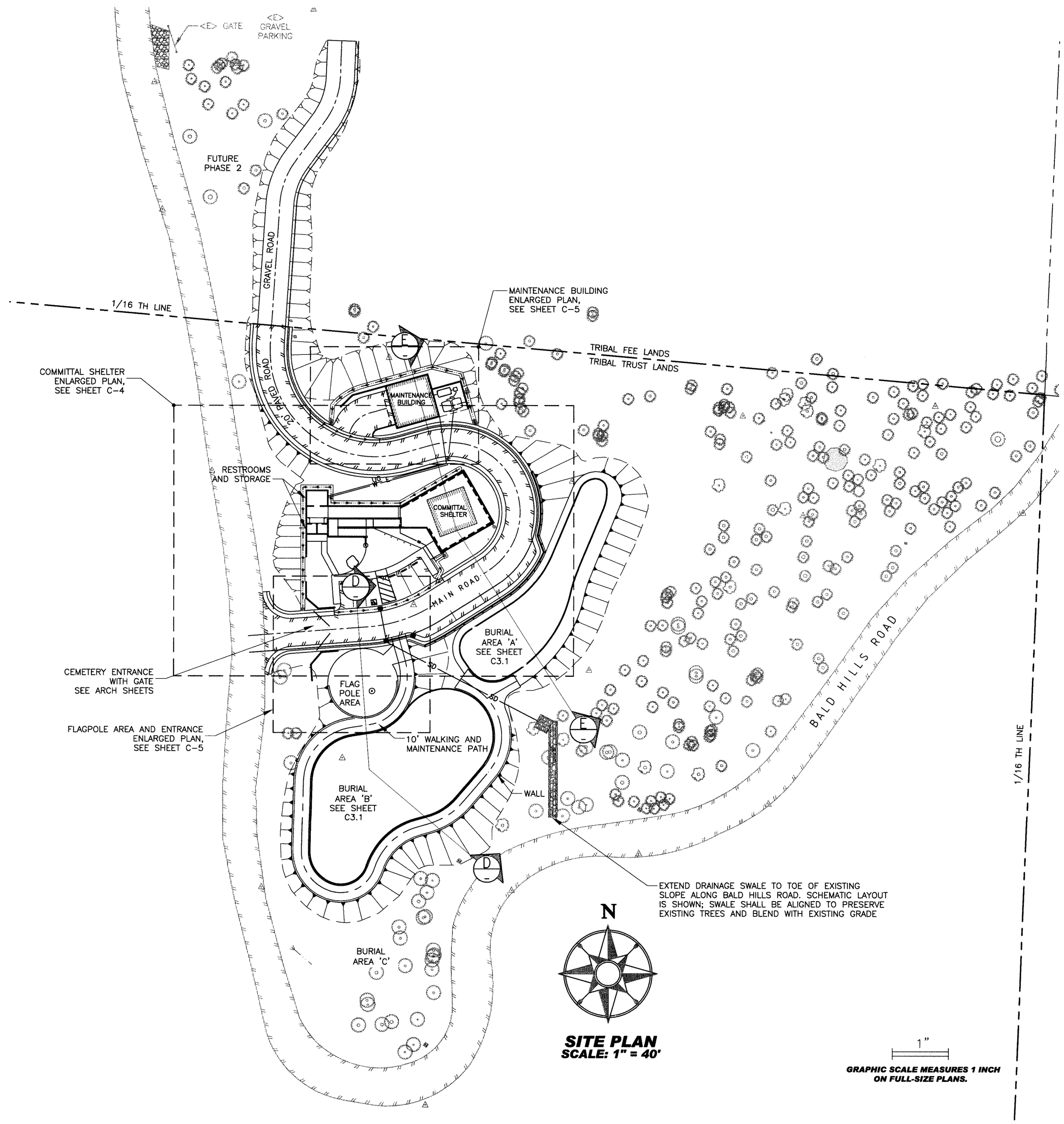

SITE PLAN
SCALE: 1" = 40'

1"

GRAPHIC SCALE MEASURES 1 INCH ON FULL-SIZE PLANS.

LACO ASSOCIATES
EUREKA · UKIAH · CONCORD
CONSULTING ENGINEERS
1-800-515-5054
WWW.LACOASSOCIATES.COM

PROFESSIONAL ENGINEER — REGISTERED — No. 70251 — Exp. 9/30/12 — CIVIL — STATE OF CALIFORNIA

NO.	REVISION	BY	CHK	DATE
	BID ADDENDUM 1	JDB	NKT	6/27/11
	100% SUBMITTAL	JDB	MAH	5/24/11
	PROGRESS SUBMITTAL #1	JDB	MAH	5/18/11
	75% SUBMITTAL	JDB	MAH	4/14/11
	DD SUBMITTAL	JDB	MAH	4/7/11

YUROK VETERANS CEMETERY
SITE PLAN

BALD HILLS ROAD, HUMBOLDT COUNTY, CA
APN:531-094-005

SCALE	AS SHOWN
DRAWN	JDB
CHECK	MAH
APPVD	MAH
DATE	4/7/11
JOB NO.	7105.03
SHEET	C3

Jun 28,2011-11:55am T:\Cadfiles\7100\7105 YUROK VETERANS CEMETERY\DWG\ 7105-03 CIV C3.dwg

REUSE OF DOCUMENTS: This document and the ideas and design incorporated herein, as an instrument of professional service, is the property of LACO Associates and shall not be reused in whole or part for any other project without LACO Associates written authorization.

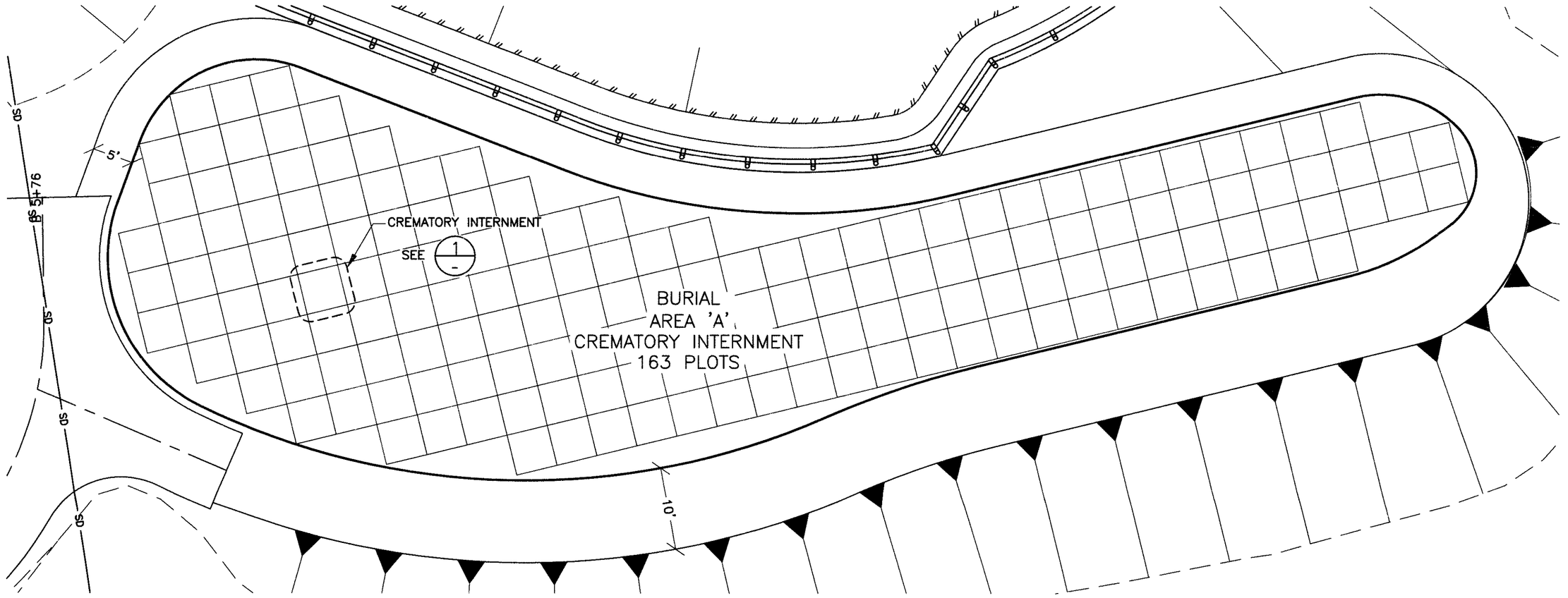

BURIAL & CREMATORY AREA 'A'
SITE PLAN
SCALE: 1" = 10'

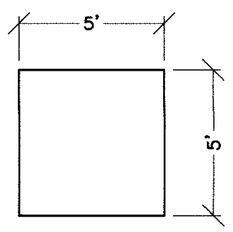

1/- CREMATORY INTERNMENT
SCALE: ¼" = 1'

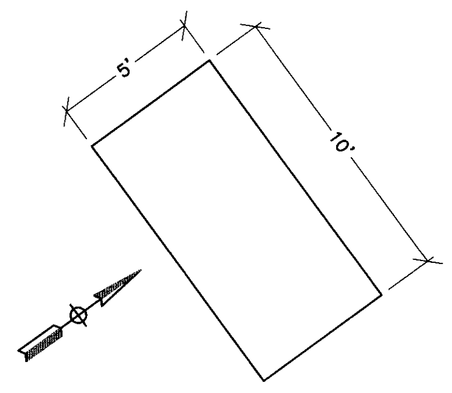

2/- STANDARD BURIAL
SCALE: ¼" = 1'

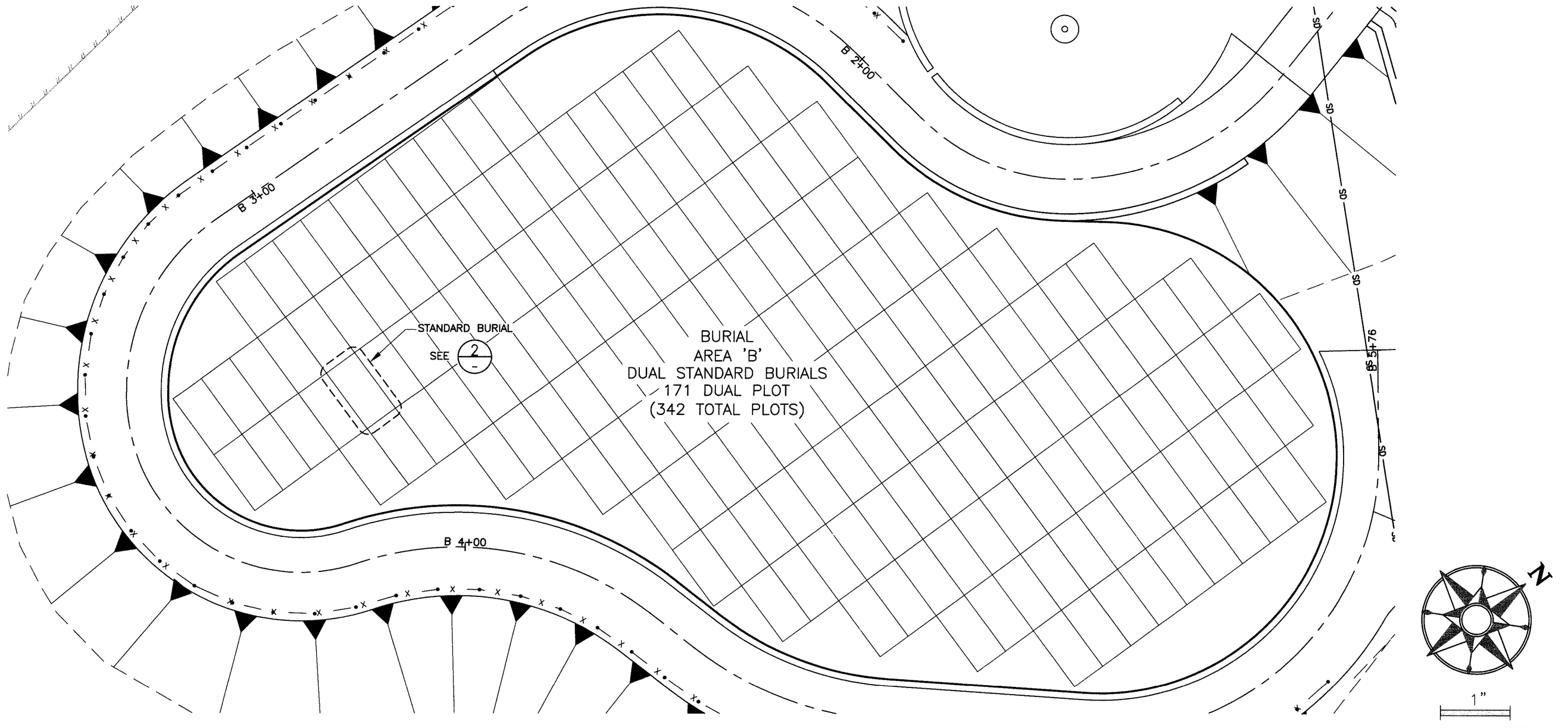

BURIAL & CREMATORY AREA 'B'
SITE PLAN
SCALE: 1" = 10'

GRAPHIC SCALE MEASURES 1 INCH ON FULL-SIZE PLANS.

REGISTERED PROFESSIONAL ENGINEER — JOHN D. BUSH — No. 70251 — Exp. 9/30/12 — CIVIL — STATE OF CALIFORNIA

LACO ASSOCIATES
EUREKA · UKIAH · CONCORD
CONSULTING ENGINEERS
1-800-515-5054
www.LACOASSOCIATES.COM

NO.	REVISION	BY	CHK	DATE
	BID ADDENDUM 1	JDB	NKT	6/27/11
	100% SUBMITTAL	JDB	MAH	5/24/11
	PROGRESS SUBMITTAL #1	JDB	MAH	5/18/11
	75% SUBMITTAL	JDB	MAH	4/14/11
	DD SUBMITTAL	JDB	MAH	4/7/11

YUROK VETERANS CEMETERY
GRAVESITE LAYOUT PLAN

BALD HILLS ROAD, HUMBOLDT COUNTY, CA
APN:531-094-005

SCALE	AS SHOWN
DRAWN	JDB
CHECK	MAH
APPVD	MAH
DATE	4/7/11
JOB NO.	7105.03
SHEET	**C3.1**

Jun 25,2011—11:59am
T:\Cadfiles\7100\7105 YUROK VETERANS CEMETERY\DWG\ 7105-03 GV C3-1.dwg

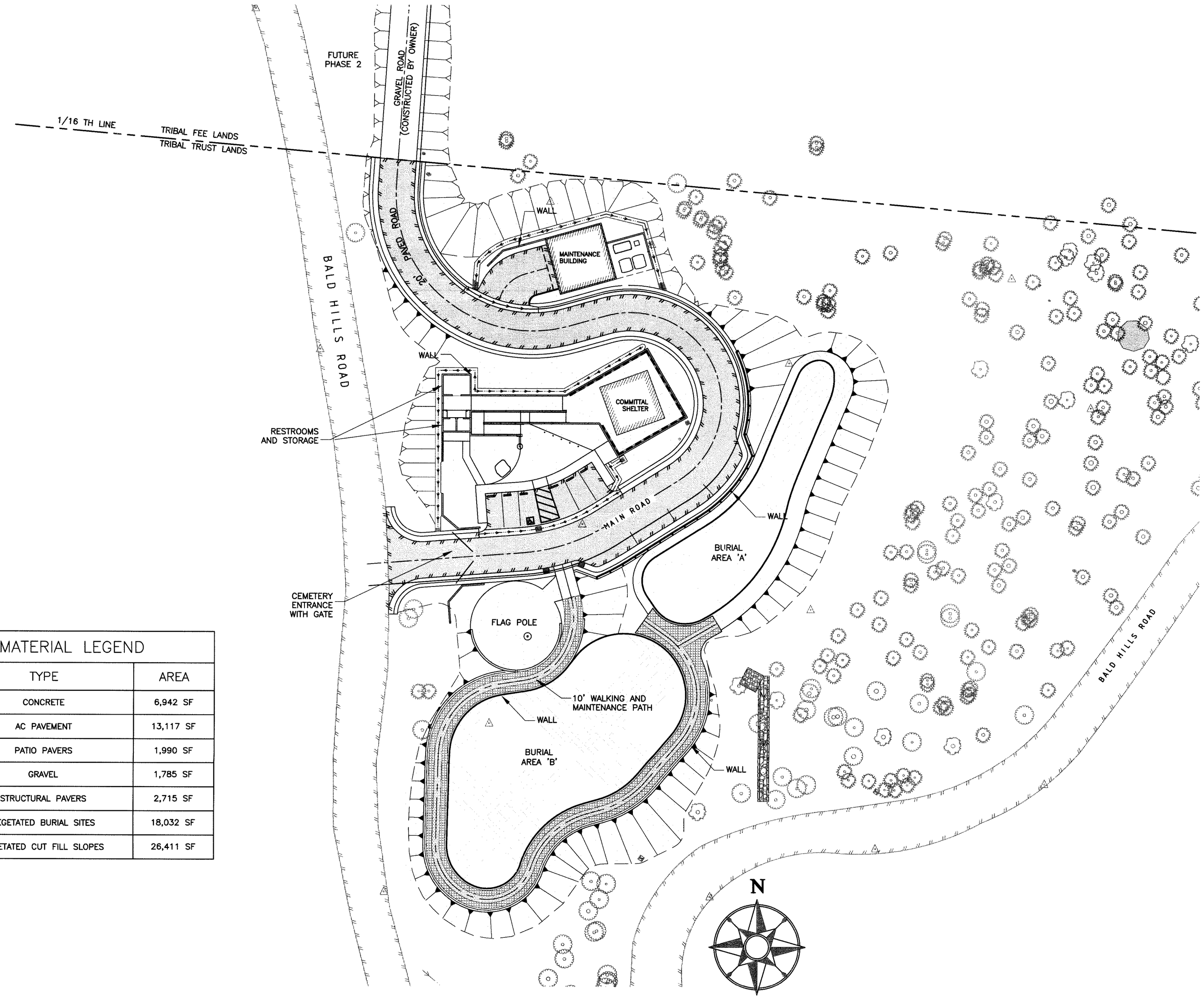

PAVING MATERIAL LEGEND		
PATTERN	TYPE	AREA
	CONCRETE	6,942 SF
	AC PAVEMENT	13,117 SF
	PATIO PAVERS	1,990 SF
	GRAVEL	1,785 SF
	STRUCTURAL PAVERS	2,715 SF
	VEGETATED BURIAL SITES	18,032 SF
	VEGETATED CUT FILL SLOPES	26,411 SF

SURFACE PAVING AND MATERIALS PLAN
SCALE: 1" = 30'

1"

GRAPHIC SCALE MEASURES 1 INCH ON FULL-SIZE PLANS.

REGISTERED PROFESSIONAL ENGINEER
WILLIAM KOHLER TUDOR
No. 70251
Exp. 9/30/12
6-26-11
CIVIL
STATE OF CALIFORNIA

LACO ASSOCIATES
EUREKA · UKIAH · CONCORD
CONSULTING ENGINEERS
1-800-515-5054
WWW.LACOASSOCIATES.COM

NO.	REVISION	BY	CHK	DATE
	BID ADDENDUM 1	JDB	NKT	6/27/11
	100% SUBMITTAL	JDB	MAH	5/24/11
	PROGRESS SUBMITTAL #1	JDB	MAH	5/18/11
	75% SUBMITTAL	JDB	MAH	4/14/11
	DD SUBMITTAL	JDB	MAH	4/7/11

YUROK VETERANS CEMETERY
SURFACE PAVING AND MATERIALS PLAN

BALD HILLS ROAD, HUMBOLDT COUNTY, CA
APN:531-094-005

SCALE	AS SHOWN
DRAWN	JDB
CHECK	MAH
APPVD	MAH
DATE	4/7/11
JOB NO.	7105.03
SHEET	C3.2

Jun 28,2011-11:52am
T:\Cadfiles\7100\7105 YUROK VETERANS CEMETERY\DWG\ 7105-03 CIV C3-2.dwg

REUSE OF DOCUMENTS: This document and the ideas and design incorporated herein, as an instrument of professional service, is the property of LACO Associates and shall not be reused in whole or part for any other project without LACO Associates written authorization.

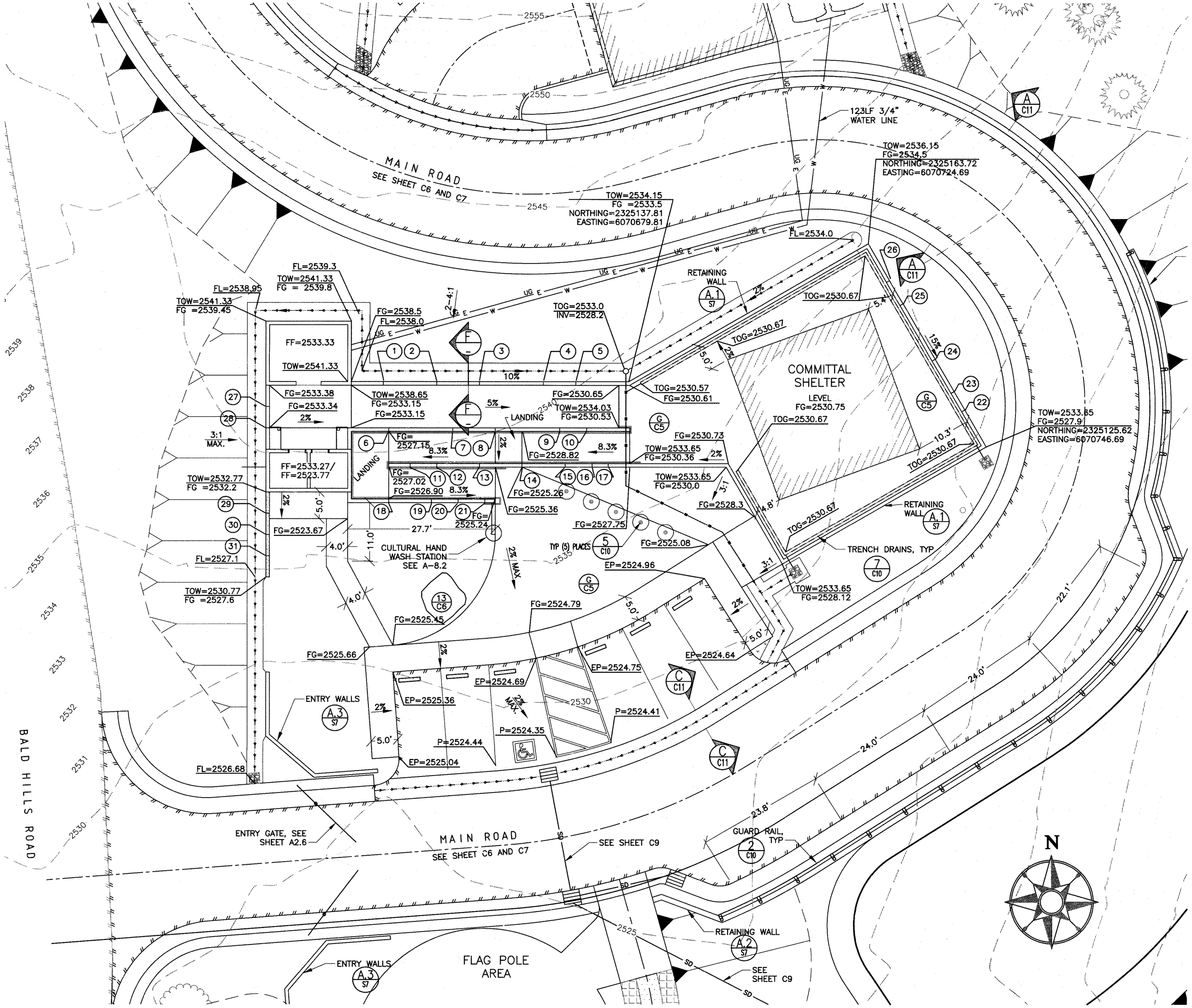

COMMITTAL SHELTER AND RESTROOM PLAN
SCALE: 1" = 10'

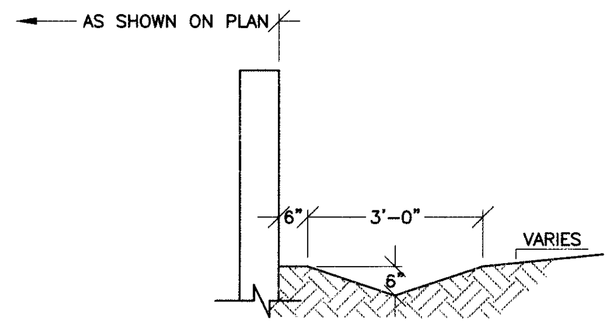

F C-5 SWALE SECTION
N.T.S.

TOP OF WALL STEP ELEVATIONS		
KEY	TOW (FEET)	TOW (FEET)
1	2538.15	2538.65
2	2537.65	2538.15
3	2537.15	2537.65
4	2536.65	2537.15
5	2536.15	2536.65
6	2537.53	2536.03
7	2536.03	2536.53
8	2535.53	2536.03
9	2534.53	2535.53
10	2534.03	2534.53
11	2530.52	2531.02
12	2531.02	2531.52
13	2531.52	2532.02
14	2532.02	2532.52
15	2532.52	2533.02
16	2533.02	2533.52
17	2533.52	2533.65
18	2530.24	2530.74
19	2529.74	2530.24
20	2529.24	2529.74
21	2528.74	2529.24
22	2533.65	2534.15
23	2534.15	2534.65
24	2534.65	2535.15
25	2535.15	2535.65
26	2535.65	2536.15
27	2537.34	2537.84
28	2536.84	2537.34
29	2532.11	2532.78
30	2531.44	2532.11
31	2530.77	2530.44

1"

GRAPHIC SCALE MEASURES 1 INCH ON FULL-SIZE PLANS.

REGISTERED PROFESSIONAL ENGINEER — JOHN D. BUSH — No. 70251 — Exp. 9/30/12 — CIVIL — STATE OF CALIFORNIA

LACO ASSOCIATES
EUREKA · UKIAH · CONCORD
CONSULTING ENGINEERS
1-800-515-5054
www.LACOASSOCIATES.com

NO.	REVISION	DATE	BY	CHK
	BID ADDENDUM 1	6/27/11	JDB	NKT
	100% SUBMITTAL	5/24/11	JDB	MAH
	PROGRESS SUBMITTAL #1	5/18/11	JDB	MAH
	75% SUBMITTAL	4/14/11	JDB	MAH
	DD SUBMITTAL	4/7/11	JDB	MAH

YUROK VETERANS CEMETERY
COMMITTAL SHELTER AND RESTROOM PLAN

BALD HILLS ROAD, HUMBOLDT COUNTY, CA
APN:531-094-005

SCALE	1"=10'
DRAWN	JDB
CHECK	MAH
APPVD	MAH
DATE	4/7/11
JOB NO.	7105.03
SHEET	C4

REUSE OF DOCUMENTS: This document and the ideas and design incorporated herein, as an instrument of professional service, is the property of LACO Associates and shall not be reused in whole or part for any other project without LACO Associates written authorization.

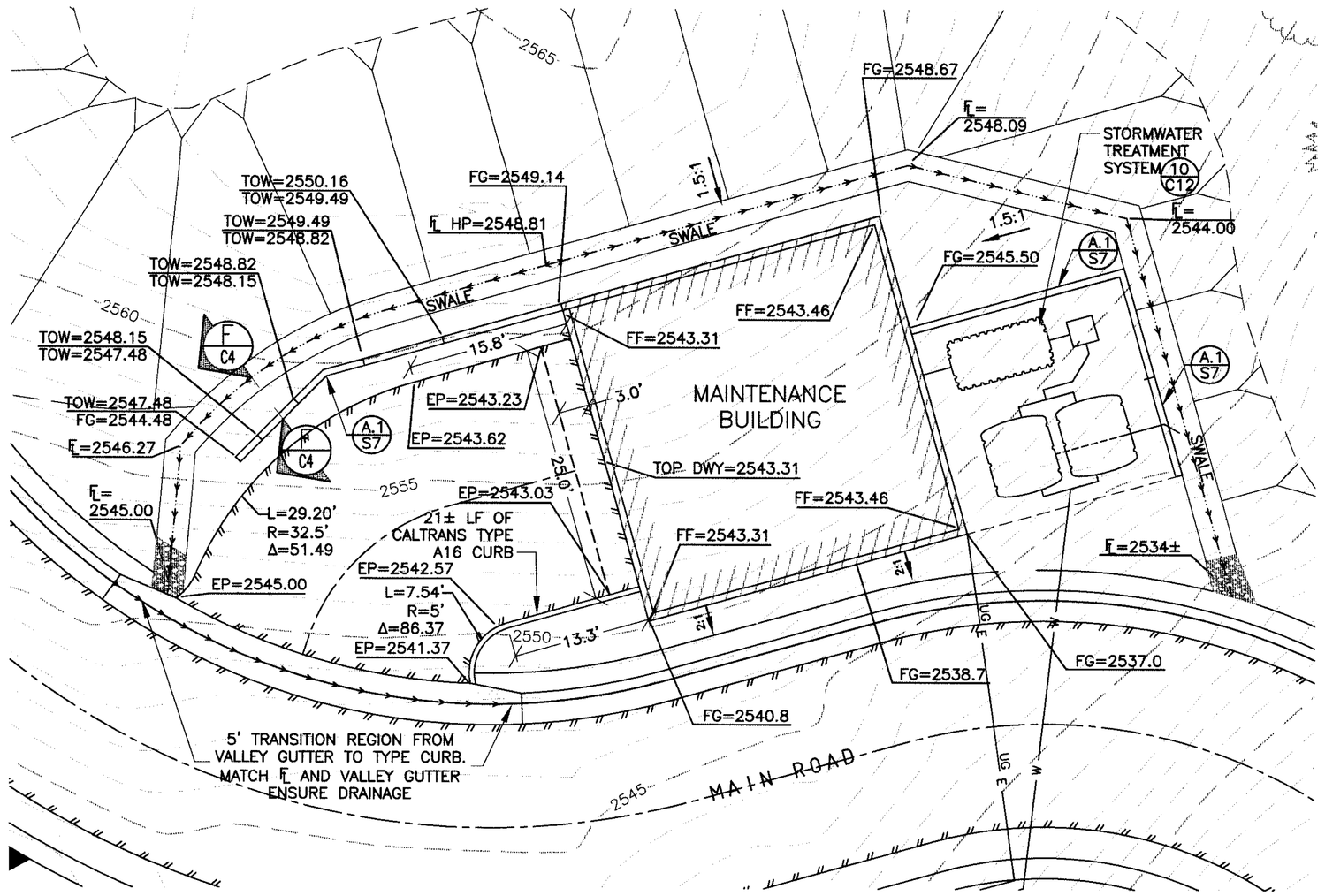

MAINTENANCE BUILDING PLAN
SCALE: 1"=10'

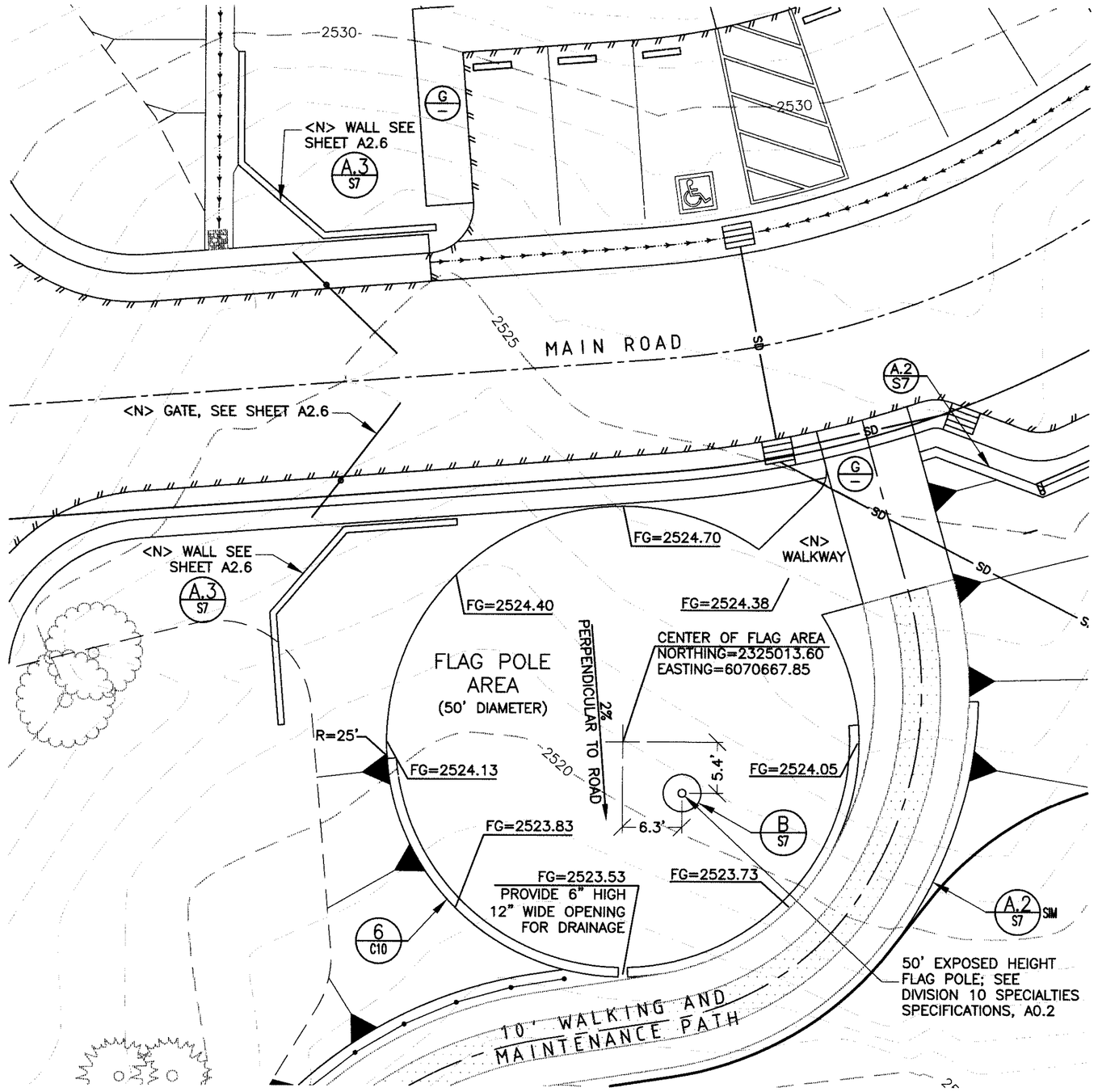

FLAG POLE AREA AND ENTRANCE PLAN
SCALE: 1"=10'

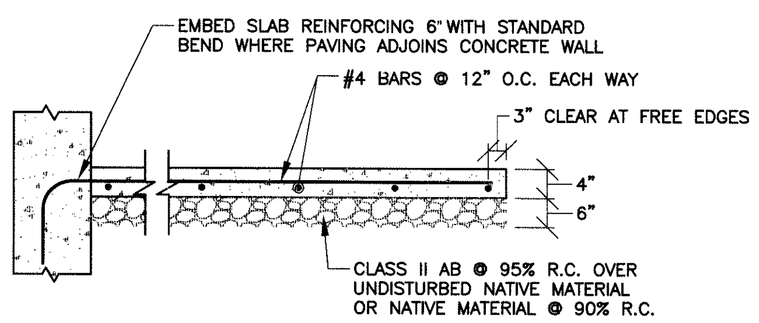

G TYPICAL CONCRETE FLATWORK SECTION
N.T.S.

N

1"

GRAPHIC SCALE MEASURES 1 INCH ON FULL-SIZE PLANS.

LACO ASSOCIATES
EUREKA · UKIAH · CONCORD
CONSULTING ENGINEERS
1-800-515-5054
www.LACOASSOCIATES.COM

NO.	REVISION	BY	CHK	DATE
	BID ADDENDUM 1	JDB	NKT	6/27/11
	100% SUBMITTAL	JDB	MAH	5/24/11
	PROGRESS SUBMITTAL #1	JDB	MAH	5/18/11
	75% SUBMITTAL	JDB	MAH	4/14/11
	DD SUBMITTAL	JDB	MAH	4/7/11

YUROK VETERANS CEMETERY
MAINTENANCE BUILDING AND FLAG POLE PLANS

BALD HILLS ROAD, HUMBOLDT COUNTY, CA
APN:531-094-005

SCALE	
DRAWN	JDB
CHECK	MAH
APPVD	MAH
DATE	4/7/11
JOB NO.	7105.03
SHEET	C5

jun 28,2011-12:00pm
T:\Cadfiles\7100\7105 YUROK VETERANS CEMETERY\DWG\ 7105-03 CIV C5.dwg

REUSE OF DOCUMENTS: This document and the ideas and design incorporated herein, as an instrument of professional service, is the property of LACO Associates and shall not be reused in whole or part for any other project without LACO Associates written authorization.

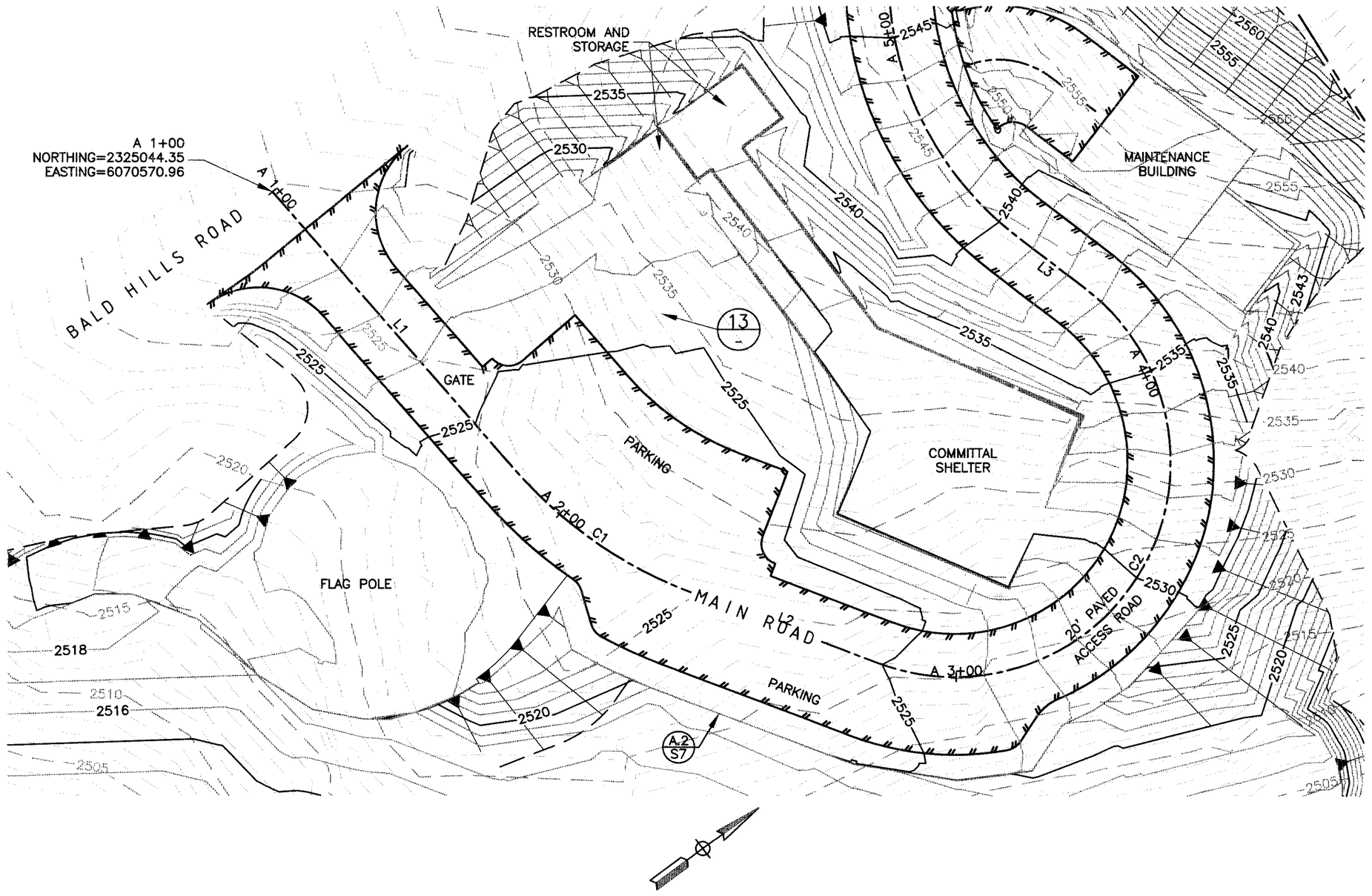

MAIN ROAD PLAN - STA 1+00 TO 5+00
SCALE: 1" = 20'

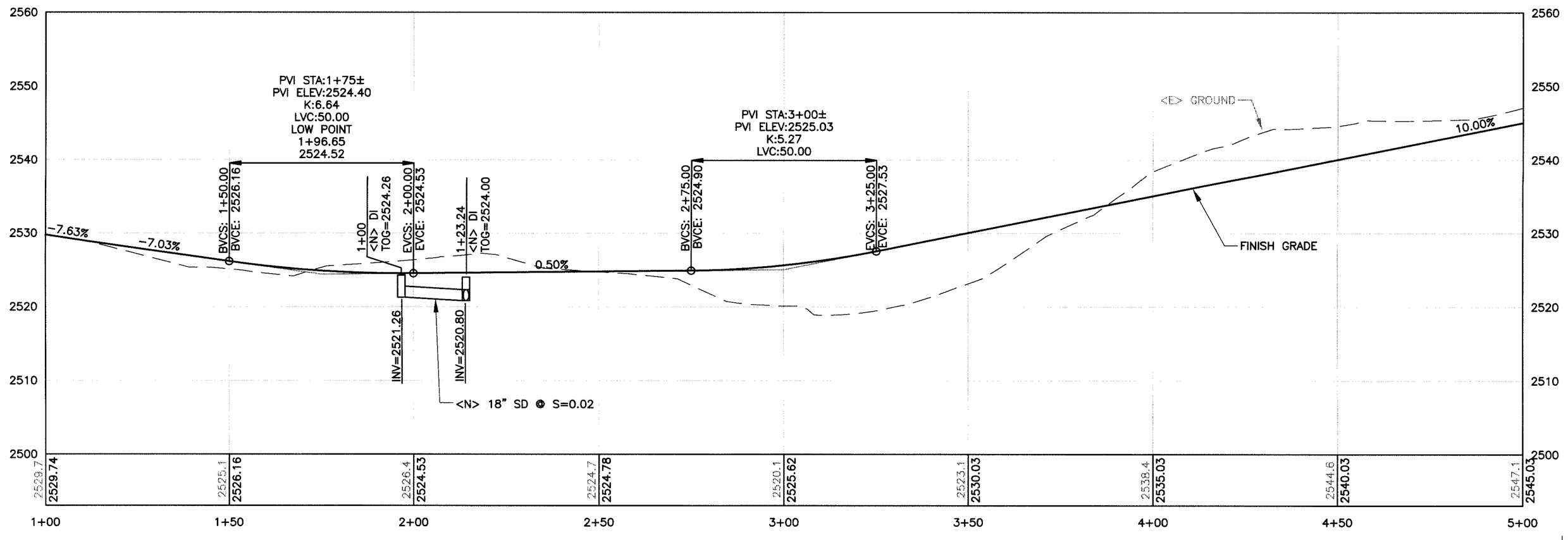

PROFILE
SCALE: 1"=20' HORIZ. 1"=10' VERT.

GRAPHIC SCALE MEASURES 1 INCH ON FULL-SIZE PLANS.

BRONZE PLAQUE: DOUBLE LINE BORDER (SEE ENLARGEMENT). TITLE TEXT TO BE 1" HEIGHT, OTHER TEXT TO BE 3/4" HEIGHT. UPPER CASE; SWISS FONT; BACKGROUND TO BE FINE PEBBLE TEXTURE WITH DARK BROWN COLOR, PROVIDE SAMPLES (SHOWING COLOR, TEXTURE, BORDER ETC.) AND SHOP DRAWINGS FOR FINAL TEXT APPROVAL, CONCEALED MOUNTING METHOD; ATTACHED TO WALL AS SHOWN ON PLAN.

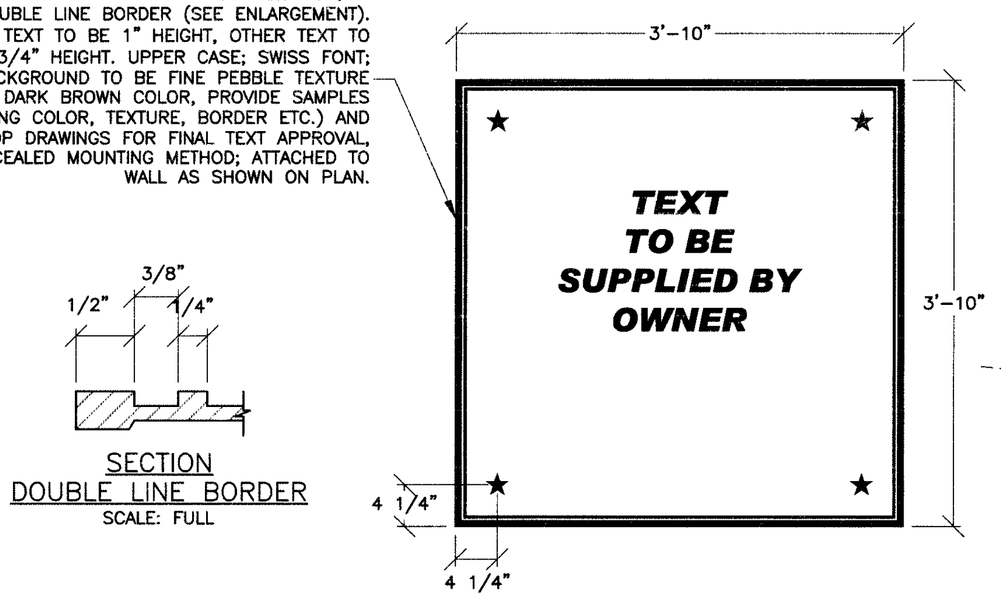

SECTION
DOUBLE LINE BORDER
SCALE: FULL

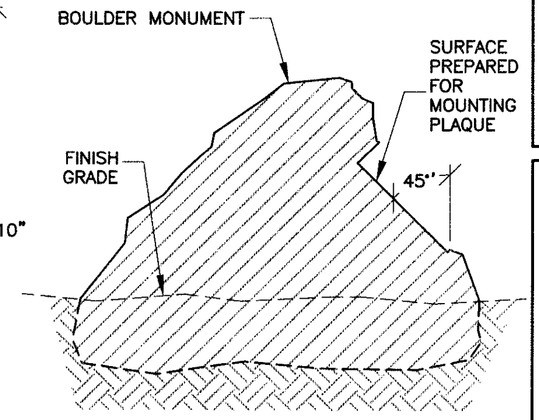

SECTION
BOULDER FACE
N.T.S.

13 DEDICATION PLAQUE
SCALE: 1"=1'

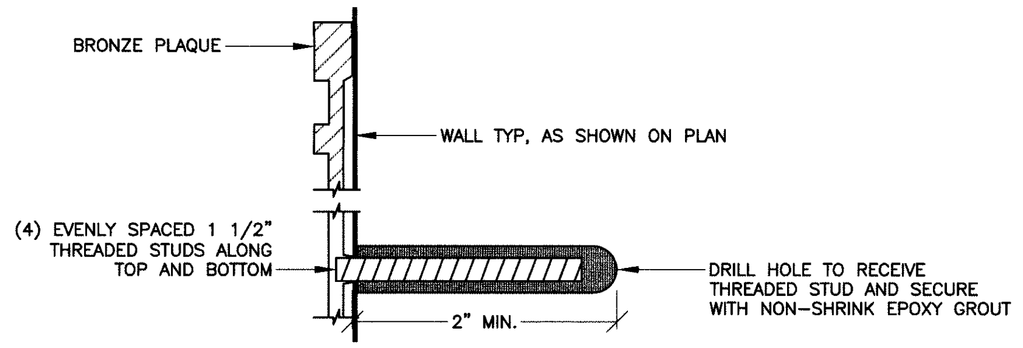

14 BRONZE PLAQUE CONCEALED MOUNTING
N.T.S.

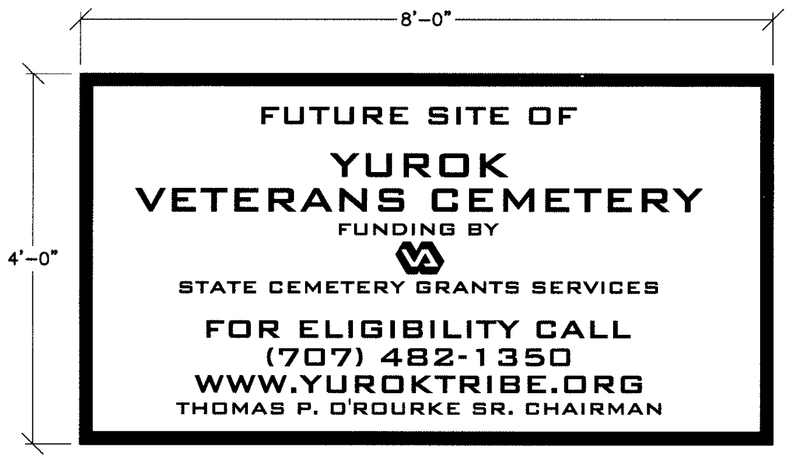

NOTE:
SIGN SHALL BE 3/4" x 4' x 8' CDX PLYWOOD; BACKGROUND SHALL BE PAINTED WHITE WITH 2" BLACK BORDER; LETTERING SHALL BE BLACK COLOR AND BANK GOTHIC MD BT. FONT; PROVIDE #2 GRADE 2" x 4" PERIMETER FRAME SUPPORT WITH (2) 4" x 4" POSTS BURIED 4'-0" IN THE GROUND. POSITION SIGN 36" FROM BOTTOM OF SIGN TO GRADE. SURFACE AND LEVEL; BACK OF SIGN FRAME EDGES AND POSTS DO NOT NEED TO BE PAINTED; TOP OF POSTS TO BE CUT SO AS NOT TO PROTRUDE ABOVE SIGN BOARD; LOCATE SIGN 50' NORTH OF MAIN ENTRANCE GATE ON ROAD SIDE. VERIFY FINAL LOCATION WITH OWNER'S DESIGNATED REPRESENTATIVE.

15 CONSTRUCTION SIGN
N.T.S.

7105 MAIN ROAD			
Number	Radius	Length	Line/Chord Direction
L1		85.85	N85° 41' 23.44"E
C1	100.00	48.91	N71° 40' 38.73"E
L2		46.71	N57° 39' 54.03"E
C2	50.00	142.52	N23° 59' 25.84"W
L3		20.90	S74° 21' 14.30"W

LACO ASSOCIATES
EUREKA · UKIAH · CONCORD
CONSULTING ENGINEERS
1-800-515-5054
WWW.LACOASSOCIATES.COM

NO.	REVISION	BY	DATE
	BID ADDENDUM 1	JDB	6/27/11
	100% SUBMITTAL	JDB	5/24/11
	PROGRESS SUBMITTAL #1	JDB	5/18/11
	75% SUBMITTAL	JDB	4/14/11
	DD SUBMITTAL	JDB	4/7/11

YUROK VETERANS CEMETERY
PLAN AND PROFILE MAIN ROAD
STA 1+00 TO 5+00

BALD HILLS ROAD, HUMBOLDT COUNTY, CA
APN:531-094-005

SCALE	SCALE
DRAWN	JDB
CHECK	MAH
APPVD	MAH
DATE	4/7/11
JOB NO.	7105.03
SHEET	C6

Jun 28,2011 - 12:01pm
T:\Codfiles\7100\7105 YUROK VETERANS CEMETERY\DWGS\ 7105-03 CIV 06.dwg

REUSE OF DOCUMENTS: This document and the ideas and design incorporated herein, as an instrument of professional service, is the property of LACO Associates and shall not be reused in whole or part for any other project without LACO Associates written authorization.

7105 MAIN ROAD			
Number	Radius	Length	Line/Chord Direction
C3	75.00	143.24	N50° 56' 00.03"W
L4		14.45	N3° 46' 45.65"E
L5		87.03	N3° 46' 45.65"E
C4	60.00	34.35	N20° 10' 49.21"E
L6		32.86	N36° 34' 52.77"E
C5	60.00	36.08	N19° 21' 07.87"E
L7		25.81	N2° 07' 22.96"E

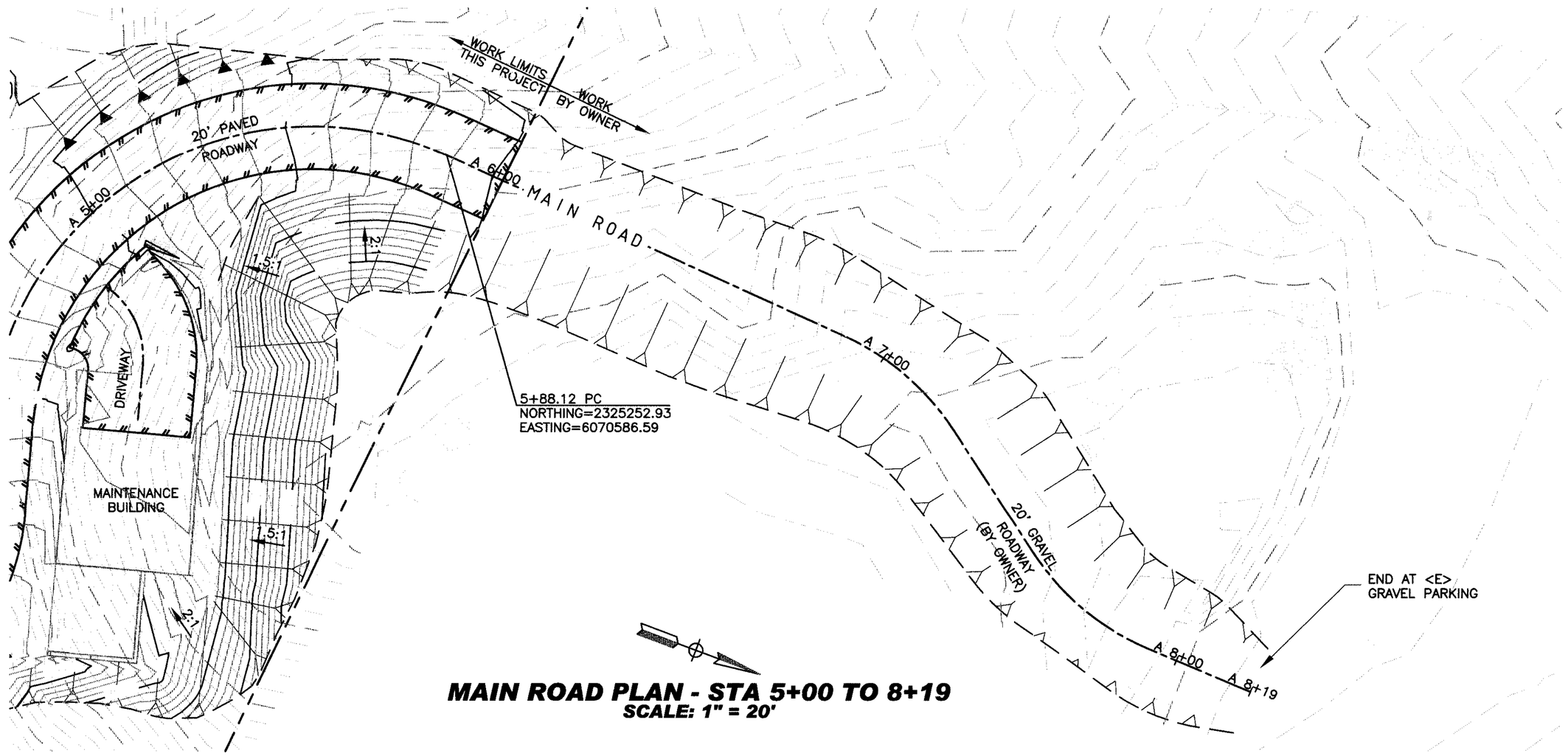

MAIN ROAD PLAN - STA 5+00 TO 8+19
SCALE: 1" = 20'

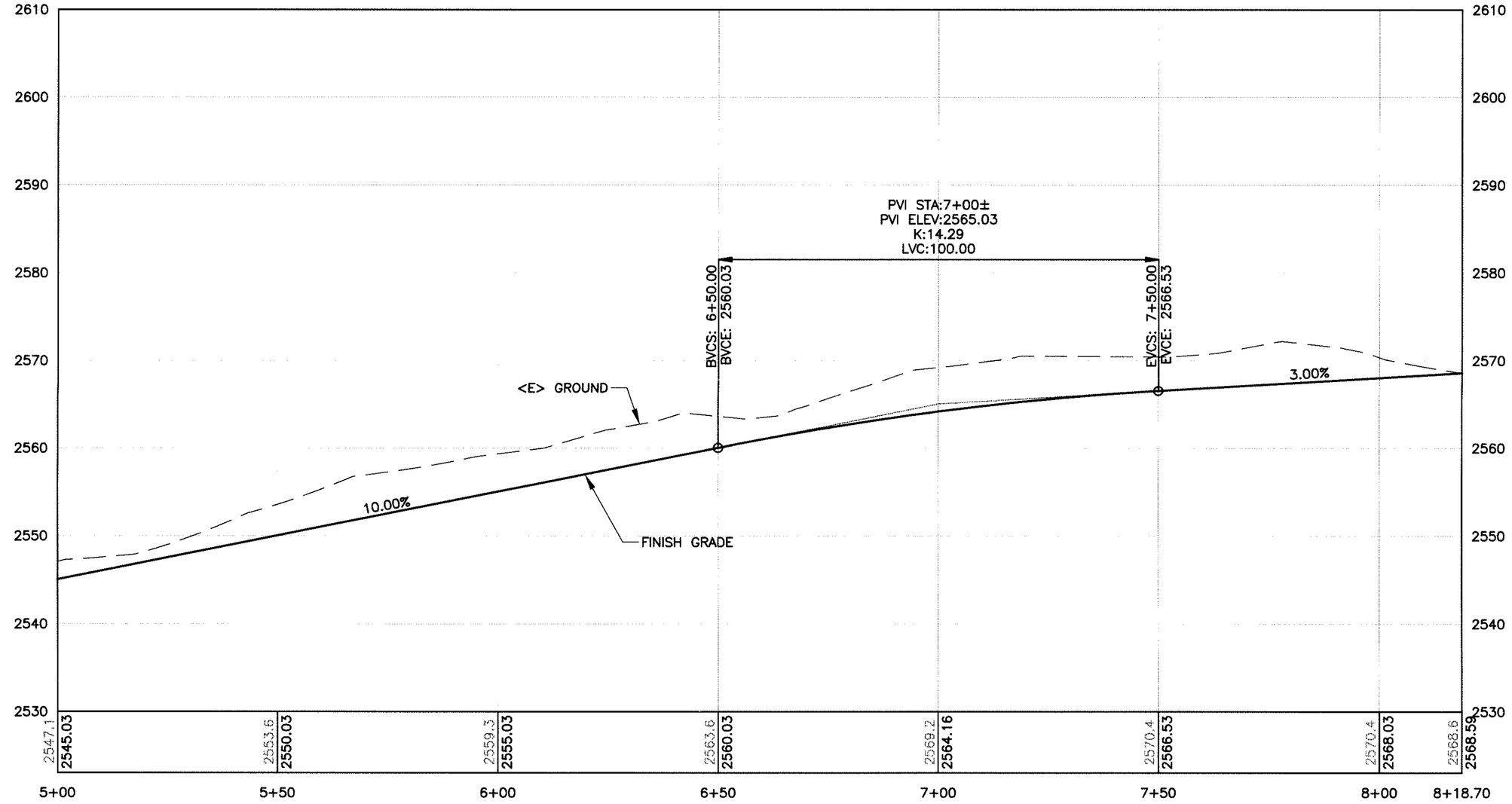

PROFILE
SCALE: 1"=20' HORIZ. 1"=10' VERT.

1"
GRAPHIC SCALE MEASURES 1 INCH ON FULL-SIZE PLANS.

REGISTERED PROFESSIONAL ENGINEER
MATHEW KOHLER YOEMAN
No. 70251
Exp. 9/30/12
6-26-11
CIVIL
STATE OF CALIFORNIA

LACO ASSOCIATES
EUREKA · UKIAH · CONCORD
CONSULTING ENGINEERS
1-800-515-5054
WWW.LACOASSOCIATES.COM

NO.	REVISION	BY	CHK	DATE
	BID ADDENDUM 1	JDB	NKT	6/27/11
	100% SUBMITTAL	JDB	MAH	5/24/11
	PROGRESS SUBMITTAL #1	JDB	MAH	5/18/11
	75% SUBMITTAL	JDB	MAH	4/14/11
	DD SUBMITTAL	JDB	MAH	4/7/11

YUROK VETERANS CEMETERY
PLAN AND PROFILE MAIN ROAD
STA 5+00 TO 8+19

BALD HILLS ROAD, HUMBOLDT COUNTY, CA
APN:531-094-005

SCALE	PER PLAN
DRAWN	JDB
CHECK	MAH
APPVD	MAH
DATE	4/7/11
JOB NO.	7105.03
SHEET	C7

Jun 26,2011-12:35pm
T:\Cadfiles\7100\7105 YUROK VETERANS CEMETERY\DWG\ 7105-03 CIV C7.dwg

REUSE OF DOCUMENTS: This document and the ideas and design incorporated herein, as an instrument of professional service, is the property of LACO Associates and shall not be reused in whole or part for any other project without LACO Associates written authorization.

7105 TRACTOR ROAD			
Number	Radius	Length	Line/Chord Direction
L1		28.84	S15° 21' 34.11"E
C1	40.00	33.86	S8° 53' 33.03"W
C2	30.00	25.18	S57° 11' 22.36"W
L2		13.14	S81° 14' 04.56"W
C3	40.00	55.68	S41° 21' 21.80"W
L3		49.85	S1° 28' 39.03"W
C5	30.00	36.90	S33° 45' 39.27"E
C6	25.00	40.75	N64° 18' 02.23"E
C7	45.00	44.52	N45° 56' 26.37"E
L5		8.02	N74° 16' 52.27"E
C8	50.00	29.70	N57° 15' 53.45"E
L4		28.40	N40° 14' 54.64"E
C4	40.00	66.22	N7° 10' 50.04"W

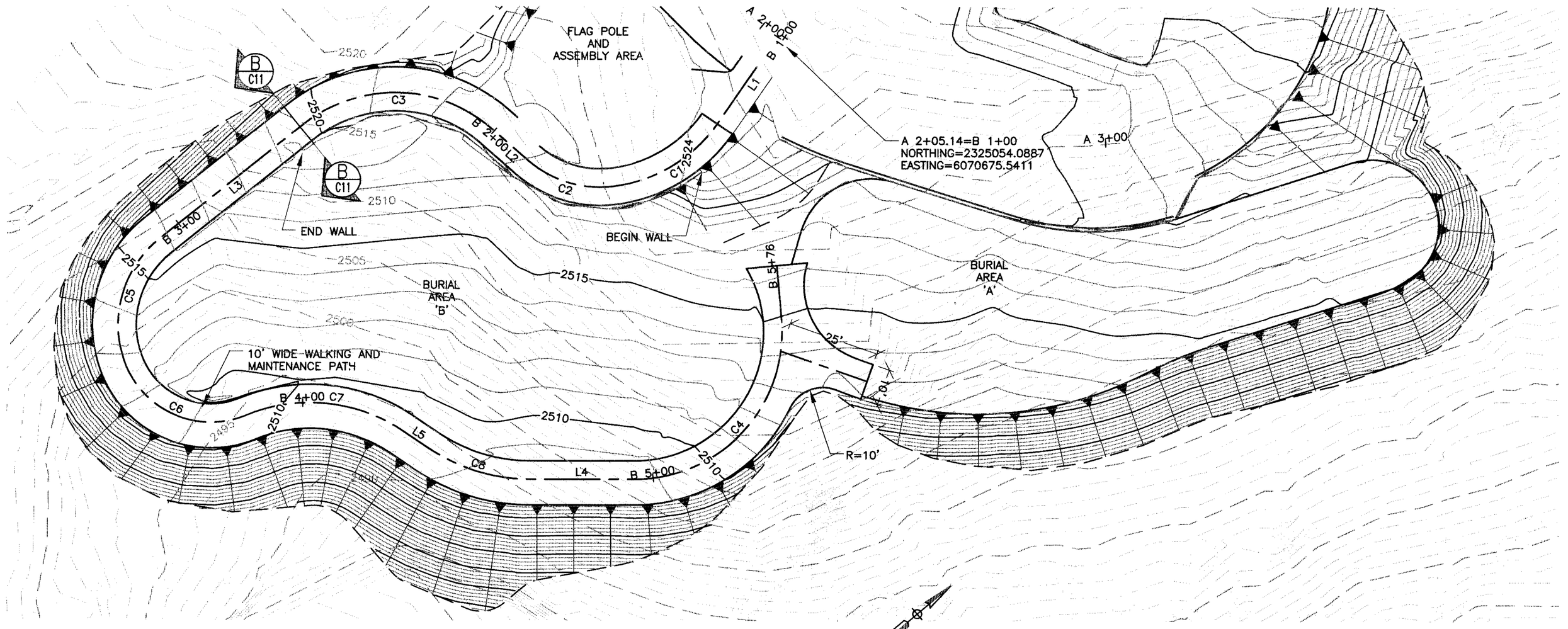

MAINTENANCE PATH PLAN AND BURIAL AREA GRADING
SCALE: 1" = 20'

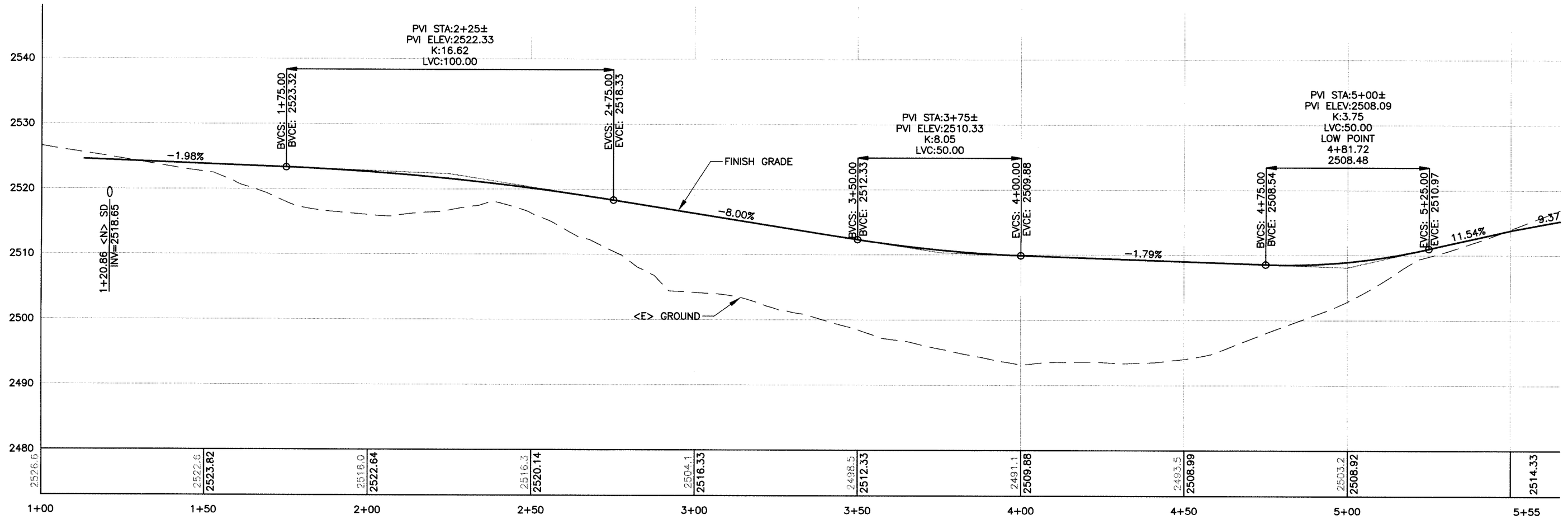

PROFILE
SCALE: 1"=20' HORIZ. 1"=10' VERT.

1"

GRAPHIC SCALE MEASURES 1 INCH ON FULL-SIZE PLANS.

LACO ASSOCIATES
EUREKA · UKIAH · CONCORD
CONSULTING ENGINEERS
1-800-515-5054
www.LACOASSOCIATES.COM

PROFESSIONAL ENGINEER · CIVIL · No. 71025 · Exp. 9/30/12 · REGISTERED · STATE OF CALIFORNIA

NO.	REVISION	BY	CHK	DATE
	BID ADDENDUM 1	JDB	NKT	6/27/11
	100% SUBMITTAL	JDB	MAH	5/24/11
	PROGRESS SUBMITTAL #1	JDB	MAH	5/18/11
	75% SUBMITTAL	JDB	MAH	4/14/11
	DD SUBMITTAL	JDB	MAH	4/7/11

YUROK VETERANS CEMETERY
PLAN AND PROFILE MAINTENANCE PATH

BALD HILLS ROAD, HUMBOLDT COUNTY, CA
APN:531-094-005

SCALE	SCALE
DRAWN	JDB
CHECK	MAH
APPVD	MAH
DATE	4/7/11
JOB NO.	7105.03
SHEET	C8

Jun 28,2011-12:12pm
T:\Cadfiles\7100\7105 YUROK VETERANS CEMETERY\DWGS\ 7105-03 CIV C8.dwg

REUSE OF DOCUMENTS: This document and the ideas and design incorporated herein, as an instrument of professional service, is the property of LACO Associates and shall not be reused, in whole or part, for any other project without LACO Associates written authorization.

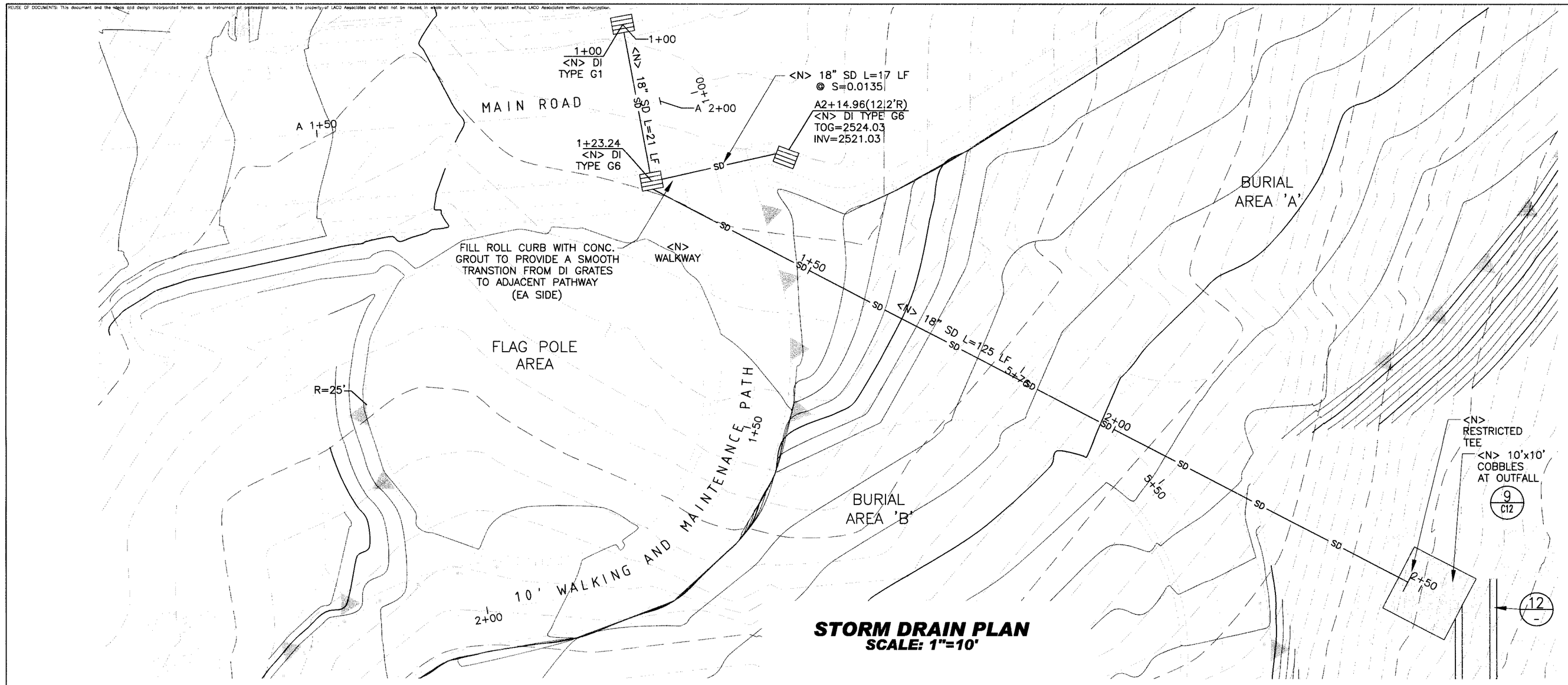

STORM DRAIN PLAN
SCALE: 1"=10'

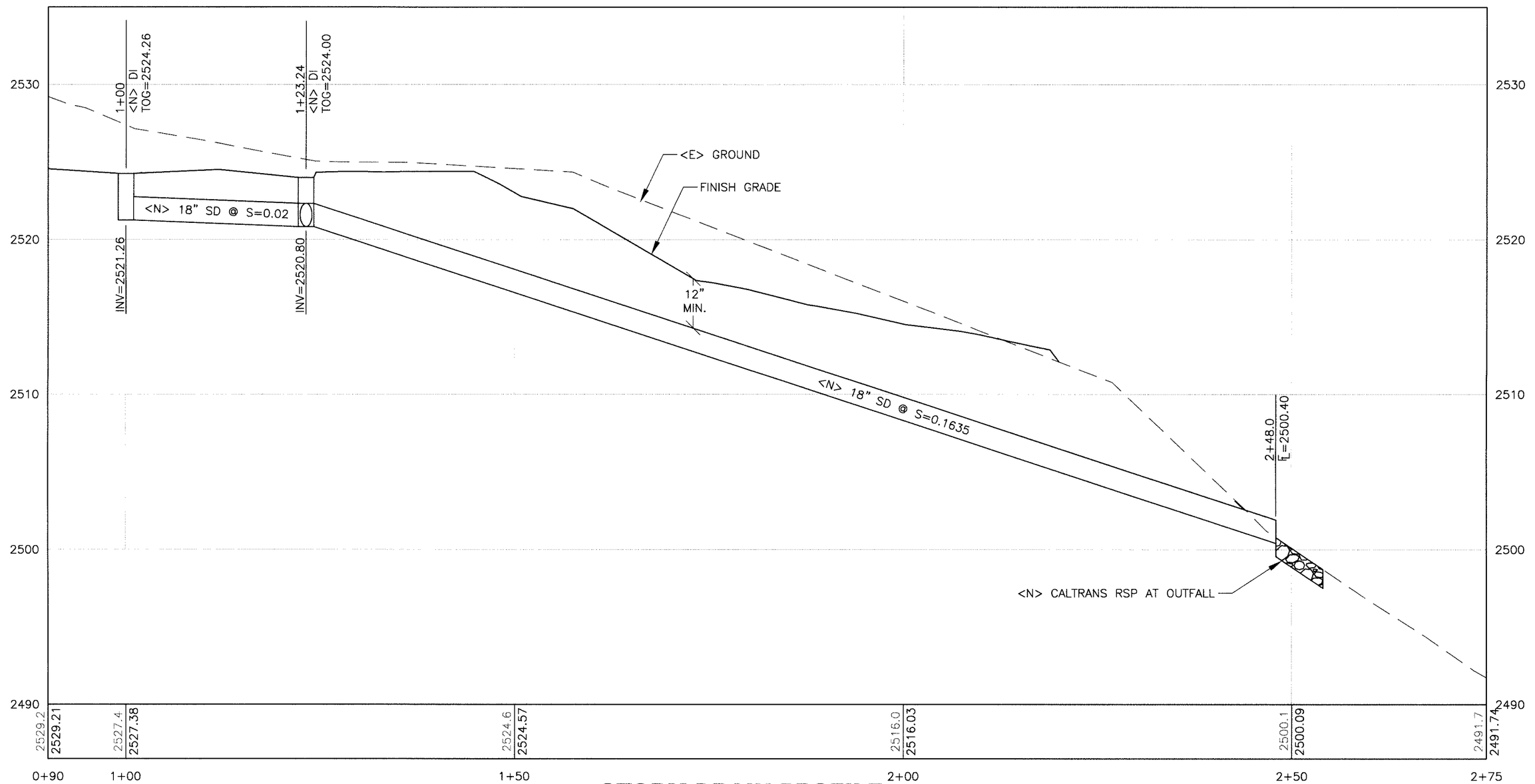

STORM DRAIN PROFILE
SCALE: 1"=10' HORIZ. 1"=5' VERT.

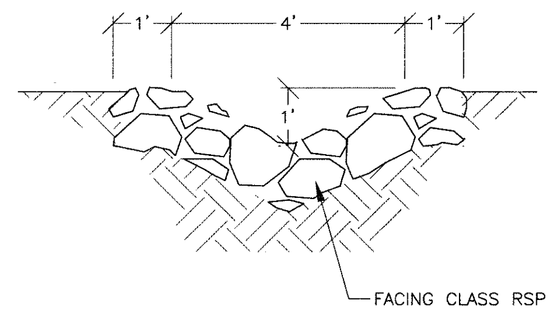

12 — **SWALE DETAIL**
N.T.S.

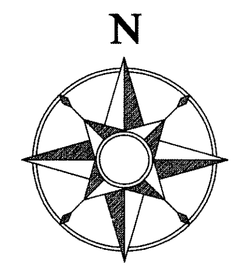

GRAPHIC SCALE MEASURES 1 INCH ON FULL-SIZE PLANS.

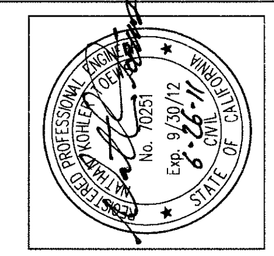

LACO ASSOCIATES
EUREKA · UKIAH · CONCORD
CONSULTING ENGINEERS
1-800-515-5054
WWW.LACOASSOCIATES.COM

NO.	REVISION	BY	CHK	DATE
	BID ADDENDUM 1	JDB	NKT	6/27/11
	100% SUBMITTAL	JDB	MAH	5/24/11
	PROGRESS SUBMITTAL #1	JDB	MAH	5/18/11
	75% SUBMITTAL	JDB	MAH	4/14/11
	DD SUBMITTAL	JDB	MAH	4/7/11

YUROK VETERANS CEMETERY
STORM DRAIN PLAN AND PROFILE

BALD HILLS ROAD, HUMBOLDT COUNTY, CA
APN:531-094-005

SCALE	
DRAWN	JDB
CHECK	MAH
APPVD	MAH
DATE	4/7/11
JOB NO.	7105.03
SHEET	C9

Jun 26,2011--12:46pm
T:\Cadfiles\7100\7105 YUROK VETERANS CEMETERY\DWG\ 7105-03 CIV C9.dwg

REUSE OF DOCUMENTS: This document and the ideas and design incorporated herein, as an instrument of professional service, is the property of LACO Associates and shall not be reused in whole or part for any other project without LACO Associates written authorization.

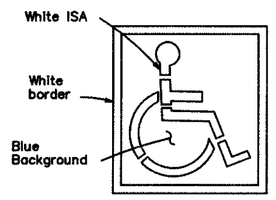

ISA MARKING
See Revised Std Plan RSP A24C

DETAIL A

SIGN R99 (CA)

SIGN R7-8b
See Notes 2 and 6

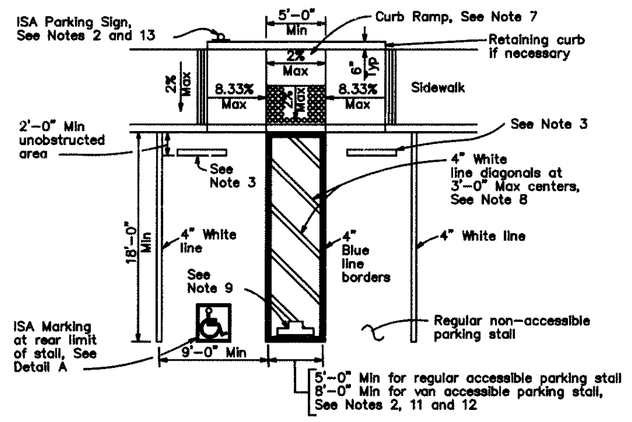

SINGLE PARKING STALL

NOTES:

1. Accessible parking spaces serving a particular building shall be located on the shortest accessible route of travel from adjacent parking to an accessible entrance. In parking facilities that do not serve a particular building, accessible parking shall be located on the shortest accessible route of travel to an accessible pedestrian entrance of the parking facility.
2. One in every eight accessible off-street parking stalls, but not less than one, shall be served by an accessible aisle of 8'-0" minimum width and shall be signed van accessible. The R7-8b sign shall be mounted below the R99B (CA) plaque or the R99C (CA) sign.
3. In each parking stall, a curb or bumper shall be provided and located to prevent encroachment of vehicles over the required width of walkways. Parking stalls shall be so located that persons with disabilities are not compelled to wheel or walk behind parked cars other than their own.
4. Surface slopes of accessible off-street parking stalls shall be the minimum possible and shall not exceed 2 percent in any direction.
5. Table A shall be used to determine the required number of accessible parking stalls in each parking lot or garage.
6. Where Plaque R99B (CA), Sign R99C (CA) or Sign R7-8b are installed, the bottom of the sign or plaque panel shall be a minimum of 7'-0" above the surrounding surface.
7. Curb ramps shall conform to the details shown on Revised Standard Plan RSP A88A.
8. Blue paint, instead of white may be used for marking accessibility aisles in areas where snow may cause white markings to not be visible.
9. The words "NO PARKING", shall be painted in white letters no less than 1'-0" high and located so that it is visible to traffic enforcement officials. See Revised Standard Plan RSP A90B for details of the "NO PARKING" pavement marking.
10. A R100B (CA) sign shall be posted in a conspicuous place at each entrance to off-street parking facilities or immediately adjacent to and visible from each stall. The sign shall include the address where the towed vehicle may be reclaimed and the telephone number of the local traffic law enforcement agency.
11. Where a single (non-van) accessible parking space is provided, the loading and unloading access aisle shall be on the passenger side of the vehicle as the vehicle is going forward into the parking space.
12. Where a van accessible parking space is provided, the loading and unloading access aisle shall be 8'-0" wide minimum, and shall be on the passenger side of the vehicle as the vehicle is going forward into the parking space.
13. Accessible Parking Only Sign shall be Sign R99C (CA) or Sign R99 (CA) with Plaque R99B (CA).

1 ACCESSIBLE PARKING DETAIL

N.T.S.

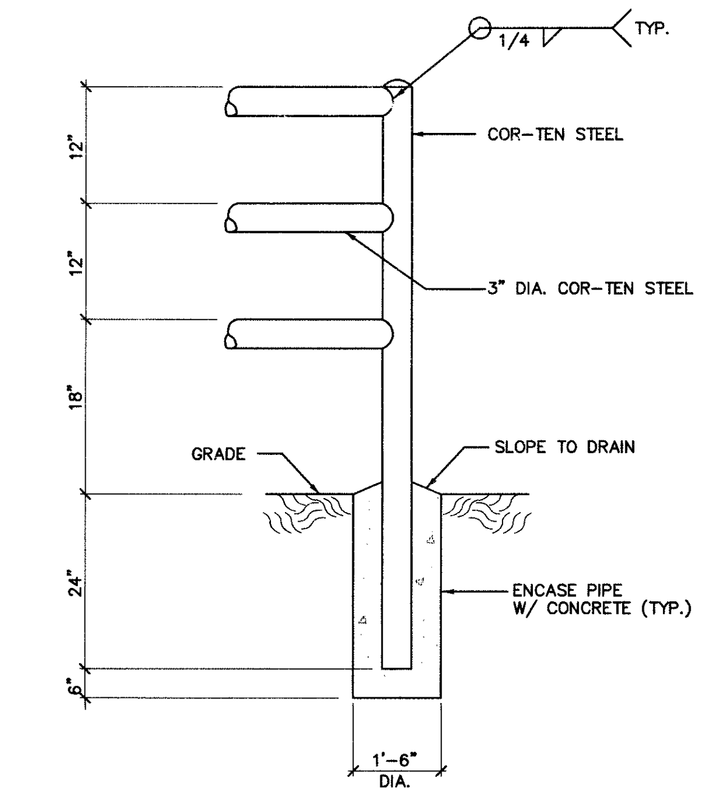

2 GUARD RAIL FENCE

N.T.S.

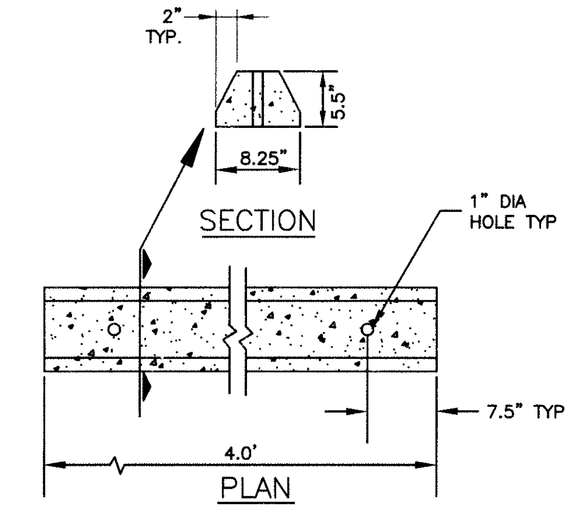

NOTE:
POSITION AT 1'-0" FROM LEFT SIDE OF PARKING STALL.

3 WHEEL STOP DETAIL

N.T.S.

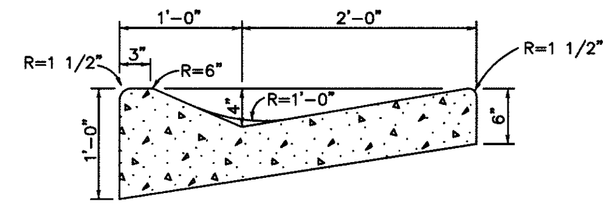

TYPE E CURB

4 ROLL CURB DETAIL

N.T.S.

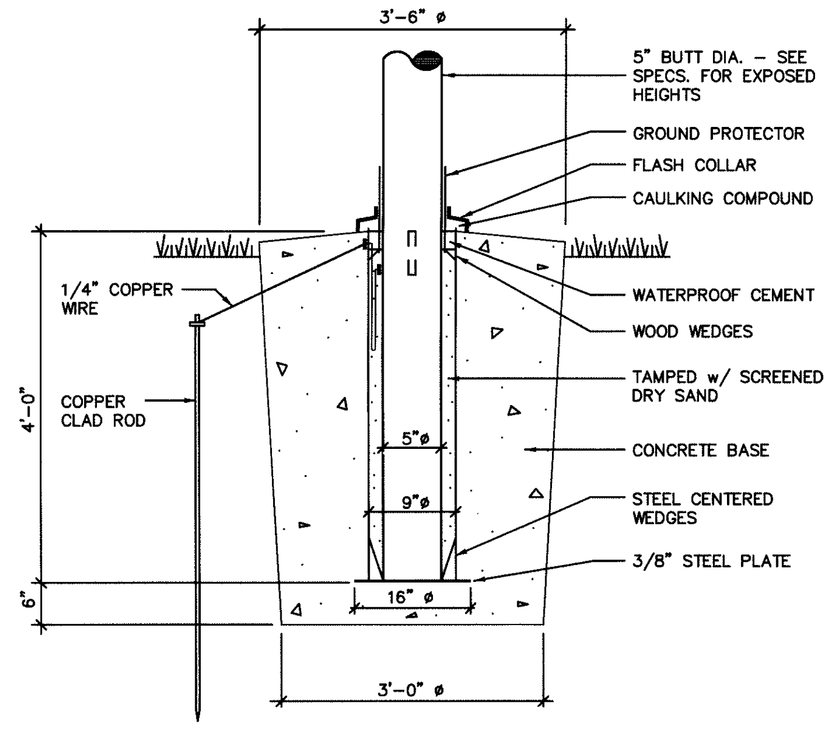

5 FLAG POLE DETAIL - AVENUE OF THE FLAGS

N.T.S.

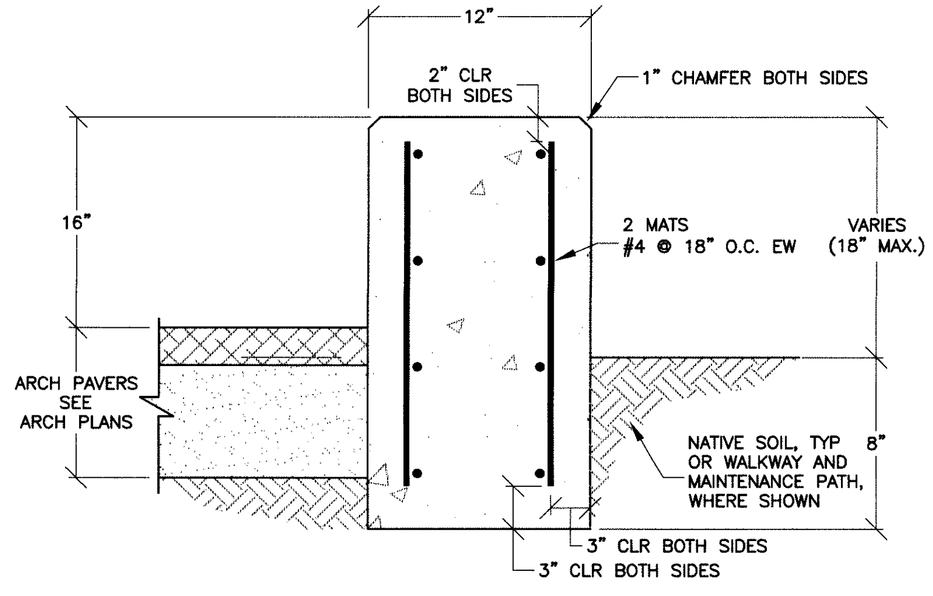

6 BARRIER CURB

N.T.S.

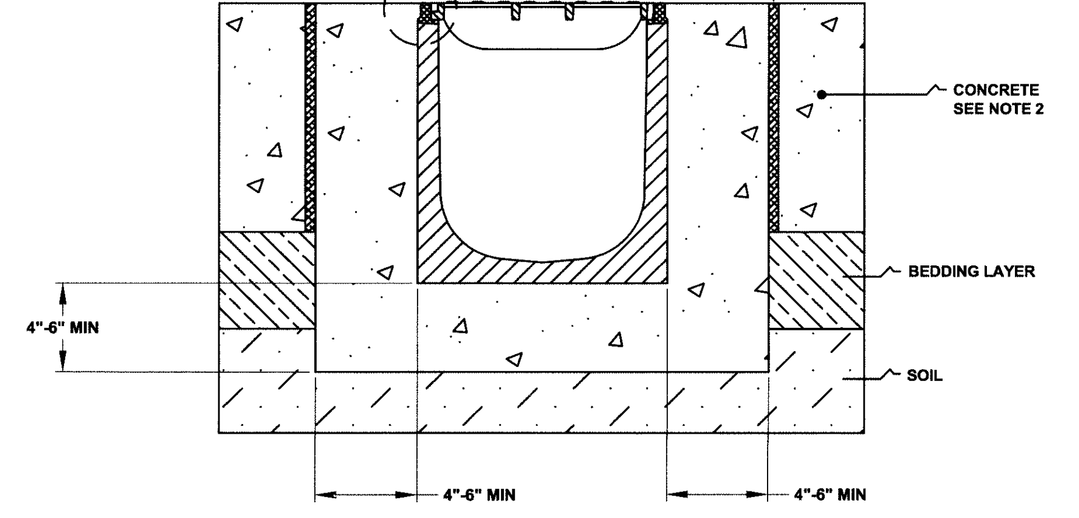

9828 SERIES TRENCH DRAIN – LOAD CLASS A–C
INSTALLED IN CONCRETE
BY SMITH DRAINAGE SYSTEMS*

* FOR USE AT MAINTENANCE DRIVEWAY. USE 9814 SERIES WITH 6 1/8" GRATE AT COMMITTAL SHELTER AREA.

NOTES:
1. IT IS NECESSARY TO ENSURE THE MINIMUM DIMENSIONS SHOWN ARE SUITABLE FOR THE EXISTING GROUND CONDITIONS. ENGINEERING ADVICE MAY BE REQUIRED.
2. A MINIMUM CONCRETE STRENGTH OF 3000 PSI IS RECOMMENDED. THE CONCRETE SHOULD BE VIBRATED TO ELIMINATE AIR POCKETS.
3. EXPANSION AND CRACK CONTROL JOINTS ARE RECOMMENDED TO PROTECT THE CHANNEL AND THE CONCRETE SURROUND. ENGINEERING ADVICE MAY BE REQUIRED.
4. THE FINISHED LEVEL OF THE CONCRETE SURROUND MUST BE APPROX. 1/8" (3) ABOVE THE TOP OF THE CHANNEL EDGE.
5. REFER TO SMITH/ACO'S LATEST INSTALLATION INSTRUCTIONS FOR COMPLETE DETAILS.

7 TRENCH DRAIN

N.T.S.

LACO ASSOCIATES
EUREKA · UKIAH · CONCORD
CONSULTING ENGINEERS
1-800-515-5054
www.LACOASSOCIATES.COM

NO.	REVISION	BY	DATE
	DD SUBMITTAL	JDB	4/7/11
	75% SUBMITTAL	JDB	4/14/11
	PROGRESS SUBMITTAL #1	JDB	5/18/11
	100% SUBMITTAL	JDB	5/24/11
	BID ADDENDUM 1	NKT	6/27/11

YUROK VETERANS CEMETERY
DETAILS

BALD HILLS ROAD, HUMBOLDT COUNTY, CA
APN:531-094-005

SCALE	SCALE
DRAWN	JDB
CHECK	MAH
APPVD	MAH
DATE	4/7/11
JOB NO.	7105.03
SHEET	C10

Jun 28,2011-12:47pm
T:\Caufield\7100\7105 YUROK VETERANS CEMETERY\DWG\ 7105-03 CIV C10.dwg

REUSE OF DOCUMENTS: This document and the ideas and design incorporated herein, as an instrument of professional service, is the property of LACO Associates and shall not be reused in whole or part for any other project without LACO Associates written authorization.

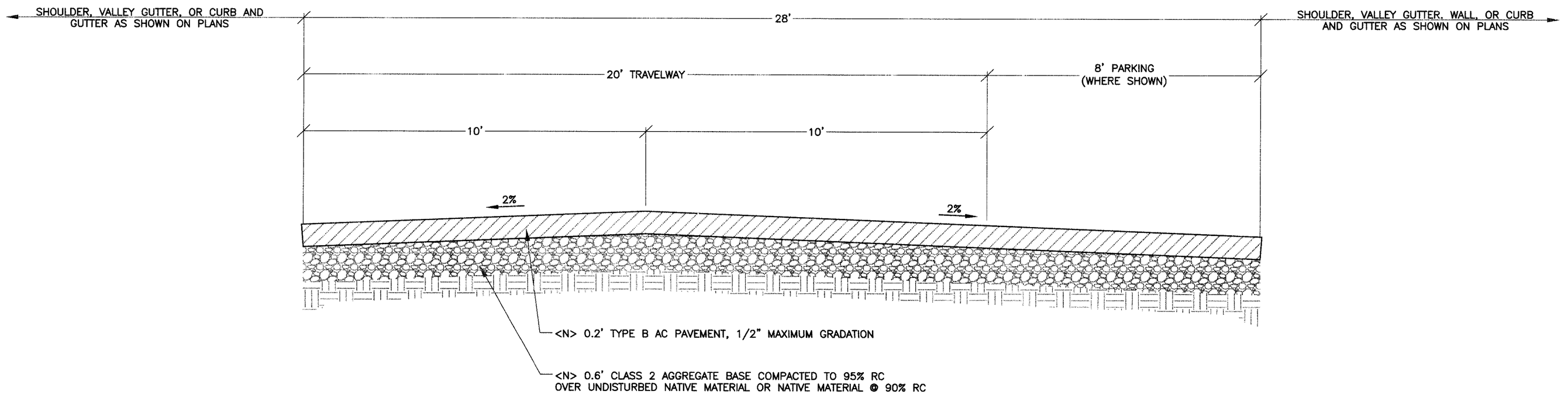

A TYPICAL ROAD SECTION
1"=1' VERT. 1"=2' HORIZ.

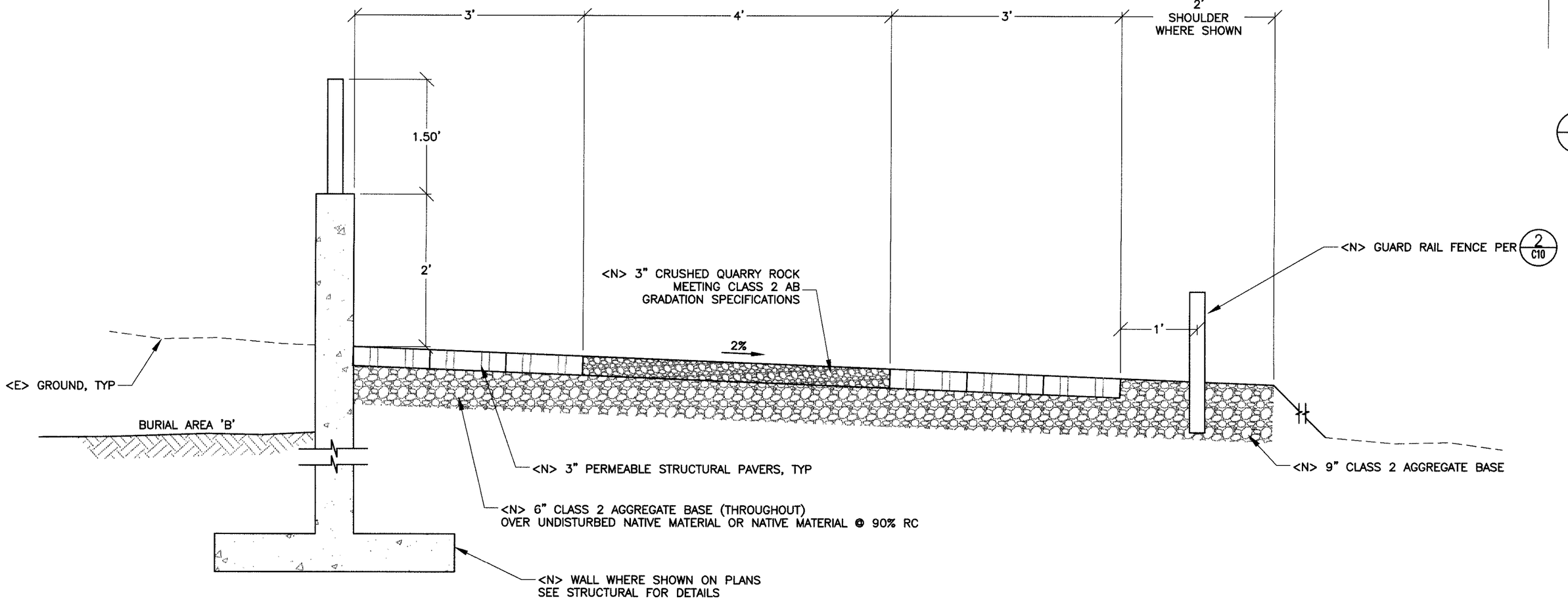

B TYPICAL WALKING AND MAINTENANCE PATH SECTION
N.T.S.

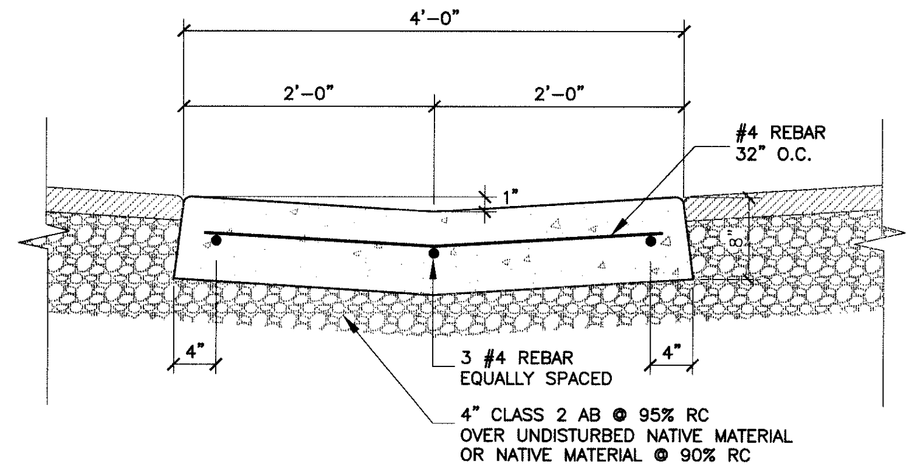

C TYPICAL VALLEY GUTTER SECTION
N.T.S.

1"
GRAPHIC SCALE MEASURES 1 INCH ON FULL-SIZE PLANS.

LACO ASSOCIATES
EUREKA · UKIAH · CONCORD
CONSULTING ENGINEERS
1-800-515-5054
www.LACOASSOCIATES.COM

NO.	REVISION	BY	CHK	DATE
	BID ADDENDUM 1	JDB	NKT	6/27/11
	100% SUBMITTAL	JDB	MAH	5/24/11
	PROGRESS SUBMITTAL #1	JDB	MAH	5/18/11
	75% SUBMITTAL	JDB	MAH	4/14/11
	DD SUBMITTAL	JDB	MAH	4/7/11

YUROK VETERANS CEMETERY
SECTIONS

BALD HILLS ROAD, HUMBOLDT COUNTY, CA
APN:531-094-005

SCALE	SCALE
DRAWN	JDB
CHECK	MAH
APPVD	MAH
DATE	4/7/11
JOB NO.	7105.03
SHEET	C11

Jun 28,2011-12:48pm
T:\CadFiles\7100\7105 YUROK VETERANS CEMETERY\DWG\ 7105-03 CIV C11.dwg

REUSE OF DOCUMENTS: This document and the ideas and design incorporated herein, as an instrument of professional service, is the property of LACO Associates and shall not be reused in whole or part for any other project without LACO Associates written authorization.

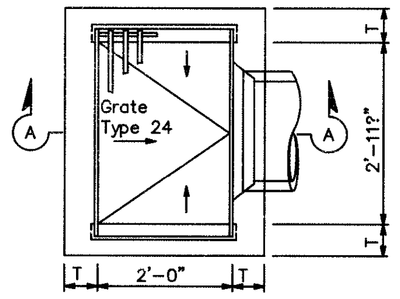

TYPE G1

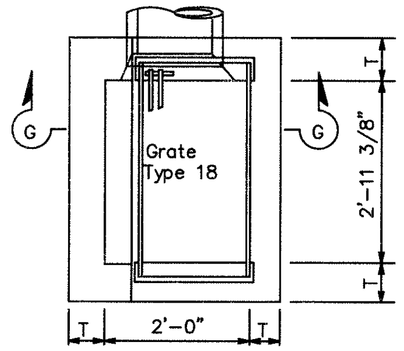

TYPE G6

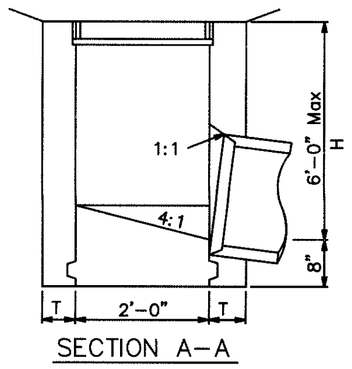

SECTION A–A

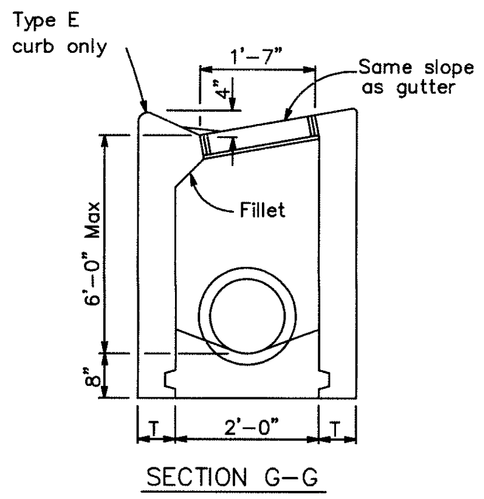

SECTION G–G

NOTES:

1. "H" is the difference in elevation between the outlet pipe flow line and the normal grade line undepressed.
2. For "T" wall thickness, see Table A below.
3. Wall reinforcing not required when "H" is 8'–0" or less and the unsupported width or length is 7'–0" or less. Walls exceeding these limits shall be reinforced with #4 bars @ 1'–6" ± centers placed 1 1/2" clear to inside of box unless otherwise shown.
4. Inlet bottom reinforcing not required. See Caltrans Standard Plan D74C for alternative reinforced bottom and alternative half round bottom.
5. Steps–None required where "H" is less than 2'–6". Where "H" is 2'–6" or more, install steps with lowest rung 1'–0" above the floor and highest rung not more than 6" below top of inlet. The distance between steps shall not exceed 1'–0" and shall be uniform throughout the length of the wall. Place steps in the wall without an opening. Steps inserts may be substituted for the bar steps. Step inserts shall comply with State Industrial Safety requirements. See Standard Plan D74C for step details.
6. Details shown apply to both metal and concrete pipe.
7. Pipe(s) can be placed in any wall.
8. Curb section shall match adjacent curb.
9. Basin floors shall have wood trowel finish and a minimum slope of 12:3 from all directions toward outlet pipe.
10. Galvanizing–See Standard Specifications or Special Provisions.
11. Cast–in–place or Precast alternative is optional with contractor. See Standard Specifications.
12. Set inlet so that grate bars are parallel to direction of principal surface flow.
13. See Standard Plans D77A and D77B for grate and frame details and weights of miscellaneous iron and steel.
14. See Standard Plan D78A for gutter depression details.
15. This dimension will vary with different grates, curbs types, box width and wall thickness.
16. Bar may be rotated as necessary to clear opening. Where "L" is 6" or less, bar may be omitted.
17. Where "L" is 6" or less, wall thickness shall be as shown in Table A.
18. Cast–in–place inlets to be formed around all pipes/stubs intersecting the inlet, and concrete poured in one continuous operation. Precast inlets shall have mortared connections conforming to details for Type GCP Inlet shown on Standard Plan D75B. See Standard Specifications for mortar composition.
19. Maximum allowable height 6'–0".

TABLE A

CONCRETE QUANTITIES				
Type	H=3'–0" to 8'–0" (T=6")		H=8'–1" to 20'–0" (T=8")	
	H=3'–0" (CY)	Additional PCC per foot (CY)	H=8'–1" (CY)	Additional PCC per foot (CY)
G–1	0.95	0.220	See Note 19	See Note 19
G–3	1.03	0.220	See Note 19	See Note 19
Table based on 8" floor slab. No deductions are to be made to these quantities because of pipe openings, different floor alternatives or different curb types. * Quantities for type G–2 and G–4 inlets based on the minimum interior dimensions.				

8 DRAINAGE INLETS

N.T.S.

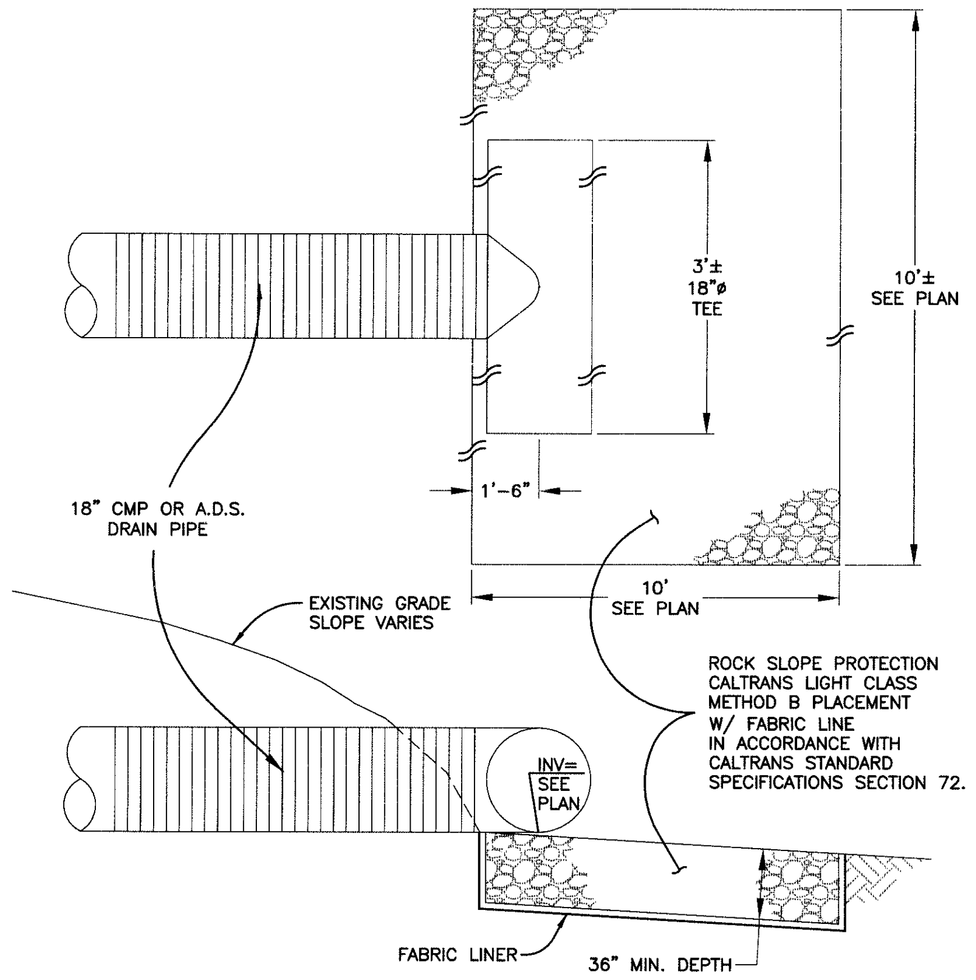

NOTE:

1. RSP SHALL CONFORM TO SLOPE OF ADJACENT GROUND

9 STORM OUTFALL

N.T.S.

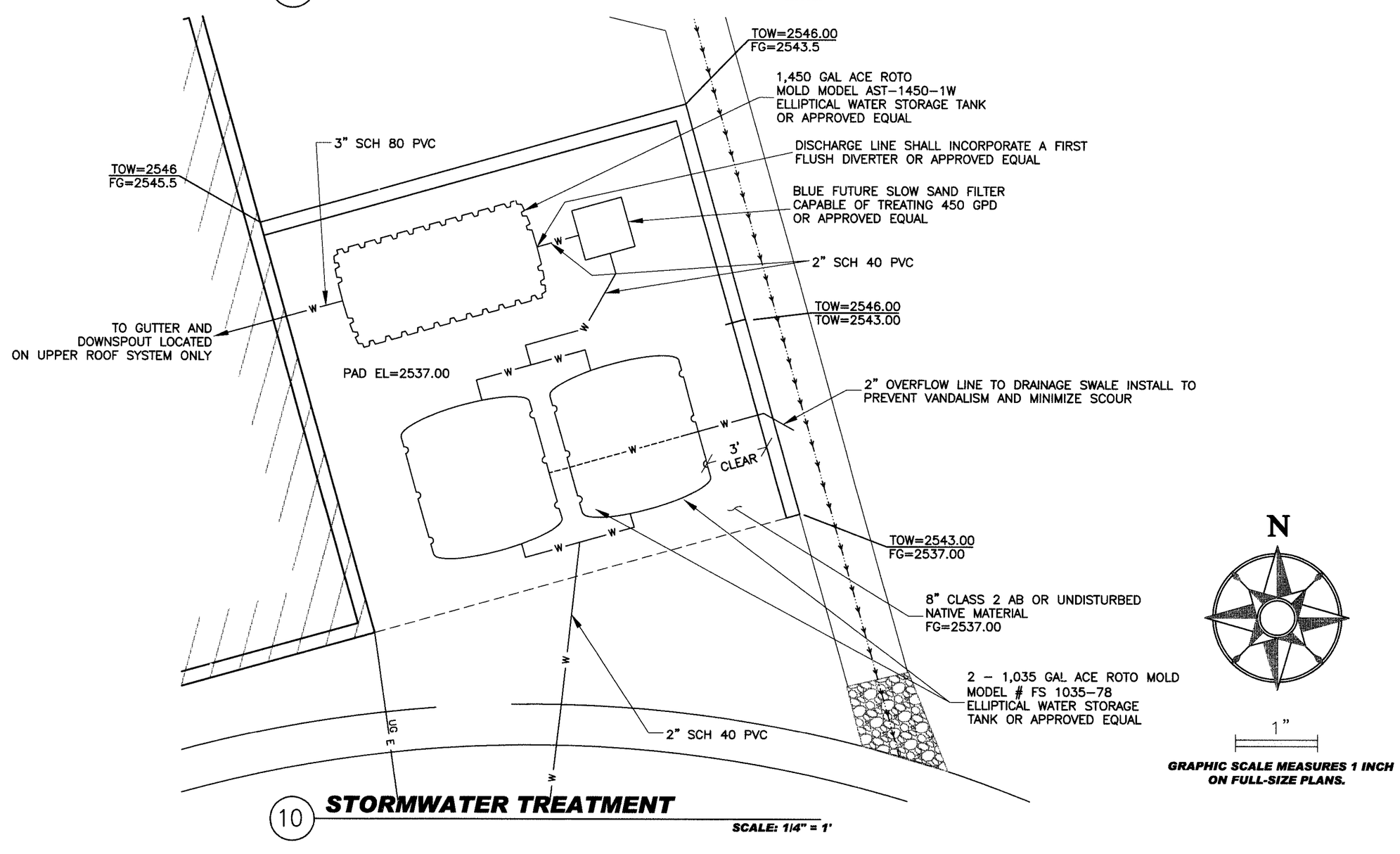

10 STORMWATER TREATMENT

SCALE: 1/4" = 1'

LACO ASSOCIATES
EUREKA · UKIAH · CONCORD
CONSULTING ENGINEERS
1-800-515-5054
www.LACOASSOCIATES.COM

REGISTERED PROFESSIONAL ENGINEER (CIVIL) No. 70251 Exp. 9/30/12 STATE OF CALIFORNIA

NO.	REVISION	BY	CHK	DATE
	BID ADDENDUM 1	JDB	NKT	6/27/11
	100% SUBMITTAL	JDB	MAH	5/24/11
	PROGRESS SUBMITTAL #1	JDB	MAH	5/18/11
	75% SUBMITTAL	JDB	MAH	4/14/11
	DD SUBMITTAL	JDB	MAH	4/7/11

YUROK VETERANS CEMETERY
DETAILS

BALD HILLS ROAD, HUMBOLDT COUNTY, CA
APN:531-094-005

SCALE	SCALE
DRAWN	JDB
CHECK	MAH
APPVD	MAH
DATE	4/7/11
JOB NO.	7105.03
SHEET	C12

Jun 28,2011 - 12:49pm
T:\Cadfiles\7100\7105 YUROK VETERANS CEMETERY\DWG\ 7105-03 CIV C12.dwg

REUSE OF DOCUMENTS: This document and the ideas and design incorporated herein, as an instrument of professional service, is the property of LACO Associates and shall not be reused in whole or part for any other project without LACO Associates written authorization.

EROSION AND SEDIMENT CONTROL BEST MANAGEMENT PRACTICES (BMP'S) SHALL COMPLY WITH THE CALIFORNIA STORM WATER BEST MANAGEMENT PRACTICE HANDBOOK–CONSTRUCTION (LATEST REVISION). THE CONTRACTOR SHALL IMPLEMENT AND MAINTAIN THE FOLLOWING BMP'S:

EROSION CONTROL BMPs

SEE BMP FACT SHEET IN STORMWATER BEST MANAGEMENT PRACTICE HANDBOOK FOR BMP DETAILS AND INSTALLATION INSTRUCTIONS.

BMP NO.	BMP	REQUIRED	AS NECESSARY	IMPLEMENTATION PERIOD
EC–1	SCHEDULING	X		THROUGHOUT
EC–2	PRESERVATION OF EXISTING VEGETATION	X		THROUGHOUT
EC–3	HYDRAULIC MULCH			
EC–4	HYDROSEEDING	X		OCT 15–APRIL 15
EC–5	SOIL BINDERS			
EC–6	STRAW MULCH			
EC–7	GEOTEXTILES AND MATS			
EC–8	WOOD MULCHING			
EC–9	EARTH DIKES AND DRAINAGE SWALES			
EC–10	VELOCITY DISSIPATION DEVICES			
EC–11	SLOPE DRAINS			
EC–12	STREAMBANK STABILIZATION			
EC–13	POLYACRYLAMIDE			
SEDIMENT CONTROL BMPs				
SE–1	SILT FENCE			
SE–2	SEDIMENT BASIN			
SE–3	SEDIMENT TRAP			
SE–4	CHECK DAMS	X		OCT 15–APRIL 15
SE–5	FIBER ROLLS	X		OCT 15–APRIL 15
SE–6	GRAVEL BAG BERM			
SE–7	STREET SWEEPING AND VACUUMING		X	OCT 15–APRIL 15
SE–8	GRAVEL BAG BARRIER			
SE–9	STRAW BALE BARRIER			
SE–10	STORM DRAIN INLET PROTECTION	X		OCT 15–APRIL 15
SE–11	CHEMICAL TREATMENT			
TRACKING CONTROL BMPs				
TC–1	STABILIZED CONSTRUCTION ENTRANCE/EXIT	X		THROUGHOUT
TC–2	STABILIZED CONSTRUCTION ROADWAY			
TC–3	ENTRANCE/OUTLET TIRE WASH		X	
WIND EROSION CONTROL BMPs				
WE–1	WIND EROSION CONTROL	X		THROUGHOUT

EROSION AND SEDIMENT CONTROL SCHEDULE:

1. RAINY SEASON CONSIDERED TO BE: OCTOBER 15 TO APRIL 15
2. START IMPLEMENTATION OF TEMPORARY SOIL STABILIZATION AND SEDIMENT CONTROL BMP'S ON OCTOBER 10 OR 5 DAYS BEFORE START OF CONSTRUCTION, WHICHEVER IS LATER.
3. COMPLETE IMPLEMENTATION OF TEMPORARY SOIL STABILIZATION AND SEDIMENT CONTROL BMP'S BY NO LATER THAN OCTOBER 15 OR START OF CONSTRUCTION, WHICHEVER IS LATER. NO CONSTRUCTION SHALL OCCUR AFTER OCTOBER 15 UNTIL APPROVED EROSION CONTROL MEASURES ARE IN PLACE.

EROSION AND SEDIMENT CONTROL NOTES:

1. EROSION AND SEDIMENTATION CONTROL MEASURES SHALL BE INSTALLED ACCORDING TO THE REQUIREMENTS OF THE LOCAL JURISDICTION GRADING ORDINANCE. THE FOLLOWING MEASURES SHALL BE TAKEN TO MINIMIZE EROSION AND TRANSPORT OF SEDIMENT OFF SITE:
   - A. TOPSOIL SHALL BE STOCKPILED ON SITE FOR USE IN AREAS TO BE REVEGETATED. USE SILT FENCES, STRAW BALES, OR SAND BAG BARRIERS AS NECESSARY TO PREVENT EROSION OF STOCKPILE AREAS.
   - B. MULCH OR OTHER PROTECTIVE COVERING SHALL BE APPLIED TO STOCKPILED SOIL THAT WILL BE EXPOSED THROUGH THE WINTER SEASON.
   - C. ANY DEFICIENCIES SHALL BE PROMPTLY CORRECTED, SUCH AS:
     - ♦ RE–SEED AND RE–MULCH AREAS WHICH DO NOT TAKE.
     - ♦ CHECK AND ADJUST SEDIMENT CONTROL BMP'S TO PREVENT SEDIMENT FROM DISCHARGING INTO SWALES OR UNGRADED AREAS. REMOVE SEDIMENT IF NECESSARY.

A. ALL CONSTRUCTION SITES, INCLUDING DRIVEWAYS, SHALL BE MAINTAINED AS NECESSARY TO MINIMIZE THE EMISSION OF DUST.

4. SPECIFIC BMPs SHOWN ON THE PLAN OR INDICATED IN THE SWPPP DOCUMENT ARE BASED ON GENERAL PRACTICES FOR TYPICAL CONSTRUCTION SITES. SITE–SPECIFIC CONDITIONS MAY REQUIRE SUBSTITUTIONS OR CHANGES TO SPECIFIED BMPs TO ACHIEVE EFFECTIVE EROSION CONTROL.
5. THE SPECIFIED BMPs SHOWN ON THIS PLAN ARE INTENDED AS RECOMMENDED MEASURES TO ASSIST THE SITE OWNER AND CONTRACTOR WITH COMPLIANCE WITH LOCAL, STATE, AND FEDERAL STORMWATER REGULATIONS. THE CONTRACTOR IS RESPONSIBLE FOR PREPARING AND IMPLEMENTING THE SWPPP AND MAINTENANCE OF EFFECTIVE EROSION CONTROL ON THE SITE, USING THE SPECIFIED BMPs OR ANY OTHER BMPs WHICH MAY BE EFFECTIVE.
6. ALL AREAS OF DISTURBED SOIL NOT PART OF AN APPROVED LANDSCAPING PLAN OR PREVIOUSLY SPECIFIED SHALL BE REVEGETATED WITH SEED MIX AS APPROVED BY OWNER AND AS DIRECTED BY ENGINEER.
7. DIVERT RUNOFF AWAY FROM STEEP, BARE SLOPES OR OTHER CRITICAL AREAS WITH BARRIERS, BERMS, DITCHES, OR OTHER FACILITIES.
8. LOCATE STOCKPILES IN AREAS THAT WILL NOT CONTRIBUTE TO OFFSITE SEDIMENT DISCHARGE. STOCKPILES SHALL BE PROTECTED BY PROMPT USE OF APPROPRIATE BMP'S.
9. INSPECTIONS SHALL BE CONDUCTED AS FOLLOWS:
   - ♦ PRIOR TO A FORECAST STORM
   - ♦ AFTER A RAIN EVENT THAT CAUSES RUNOFF FROM THE CONSTRUCTION SITE
   - ♦ AT 24–HOUR INTERVALS DURING EXTENDED RAIN EVENTS
   - ♦ WEEKLY FROM OCTOBER 15 TO APRIL 15.
   - ♦ AT OTHER INTERVALS OF TIME SPECIFIED IN THE CONTRACT DOCUMENTS
10. OWNER AND ENGINEER ASSUME NO RESPONSIBILITY FOR EROSION OR RELEASE OF SEDIMENT FROM THE SITE DUE TO INSTALLATION PROBLEMS, MATERIAL DEFECTS, UNFORESEEN CIRCUMSTANCES, OR ACTS OF GOD.
11. ALL SLOPES GREATER THAN 2:1 SHALL HAVE JUTE NETTING INSTALLED PER MANUFACTURER'S RECOMMENDATIONS.
12. LANDSCAPING, AS SHOWN ON THE PROJECT PLANTING PLAN, MAY BE SUBSTITUTED FOR THE EROSION CONTROLS SHOWN IN THIS PLAN, PROVIDED THAT IT PROVIDES AN EQUIVALENT LEVEL OF EROSION CONTROL. SUBSTITUTIONS SHALL BE APPROVED IN ADVANCE BY THE ENGINEER.

LEGEND:

- SE–10 STORM DRAIN INLET PROTECTION
- TC–1 STABILIZED CONSTRUCTION ENTRANCE/EXIT
- SE–5 FIBER ROLLS
- SE–1 SILT FENCE
- SE–4 CHECK DAM

SEE SHEET C14 FOR CONSTRUCTION DETAILS OF THE FEATURES NOTED ABOVE.

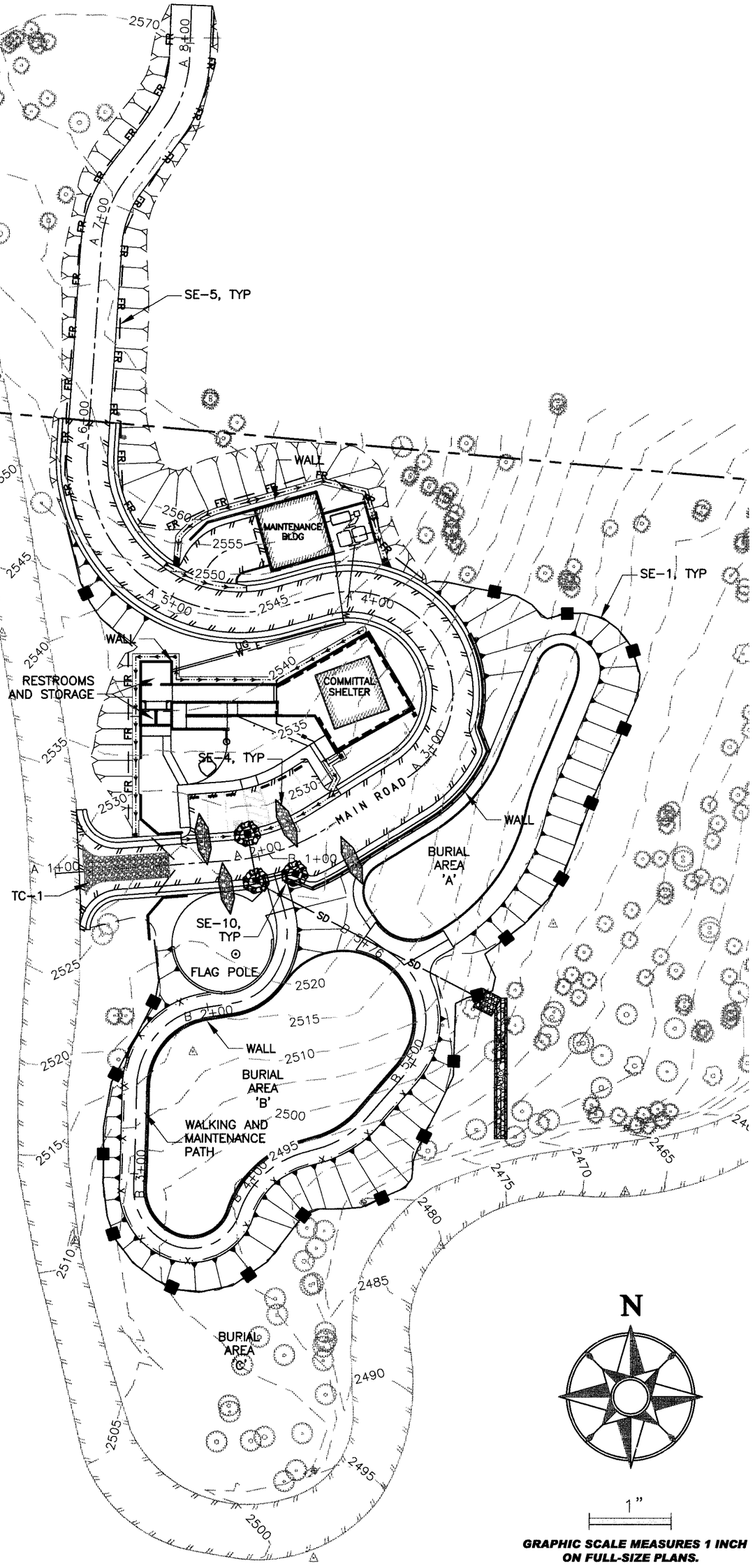

GRAPHIC SCALE MEASURES 1 INCH ON FULL-SIZE PLANS.

EROSION AND SEDIMENT CONTROL PLAN
SCALE: 1" = 40'

LACO ASSOCIATES
EUREKA · UKIAH · CONCORD
CONSULTING ENGINEERS
1-800-515-5054
www.LACOASSOCIATES.COM

REGISTERED PROFESSIONAL ENGINEER — WILLIAM KOHLER — No. 70251 — Exp. 9/30/12 — CIVIL — STATE OF CALIFORNIA

NO.	REVISION	BY	CHK	DATE
1	BID ADDENDUM 1	JDB	NKT	6/27/11
	100% SUBMITTAL	JDB	MAH	5/24/11
	PROGRESS SUBMITTAL #1	JDB	MAH	5/18/11
	75% SUBMITTAL	JDB	MAH	4/14/11
	DD SUBMITTAL	JDB	MAH	4/7/11

YUROK VETERANS CEMETERY
EROSION AND SEDIMENT CONTROL PLAN

BALD HILLS ROAD, HUMBOLDT COUNTY, CA
APN:531-094-005

SCALE	AS SHOWN
DRAWN	JDB
CHECK	MAH
APPVD	MAH
DATE	4/7/11
JOB NO.	7105.03
SHEET	C13

Jan 26,2011--12:51pm T:\Cadfiles\7100\7105 YUROK VETERANS CEMETERY\DWG\ 7105-03 CIV C13.dwg

REUSE OF DOCUMENTS: This document and the ideas and design incorporated herein, as an instrument of professional service, is the property of LACO Associates and shall not be reused in whole or part for any other project without LACO Associates written authorization.

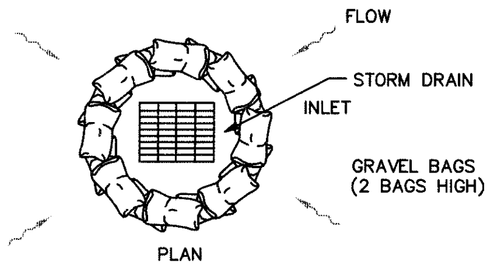

GRAVEL BAG BARRIER

SE-10 INLET PROTECTION
N.T.S.

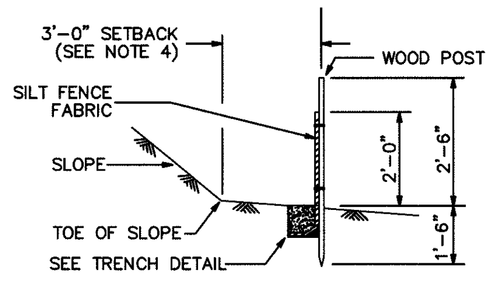

SECTION A–A
TEMPORARY SILT FENCE

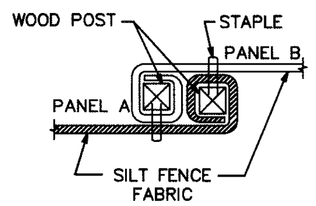

PLAN
POST AT JOINTS

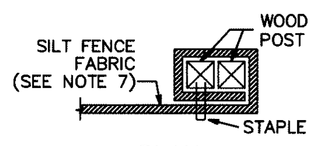

PLAN
END POST DETAIL

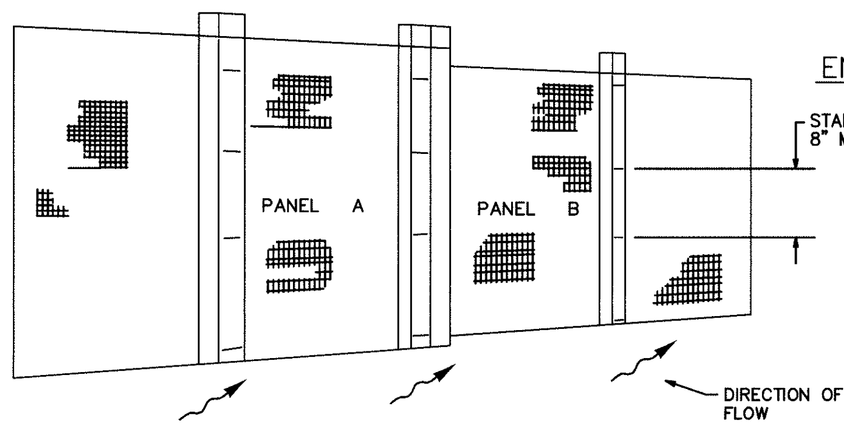

PERSPECTIVE
SILT FENCE PANELS AT JOINTS

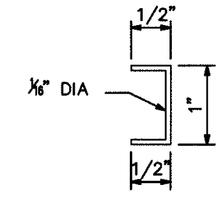

STAPLE DETAIL
(SEE NOTE 8)

NOTES:

1. INSTALL TEMPORARY SILT FENCE BY FIRST DIGGING TRENCH, DRIVING POSTS, PLACING AND SECURING FABRIC. THEN BACKFILL AND TAMP.
2. REACH LENGTH NOT TO EXCEED 500 FEET.
3. THE DOWN STREAM END OF THE TEMPORARY SILT FENCE SHALL HAVE THE LAST 8' ANGLED UP SLOPE.
4. SETBACK DIMENSIONS MAY VARY TO FIT FIELD CONDITIONS.
5. POSTS TO OVERLAP AND FENCE FABRIC TO FOLD AROUND EACH POST ONE FULL TURN. SECURE FABRIC WITH 4 STAPLES FOR EACH POST.
6. POSTS SHALL BE DRIVEN TIGHTLY TOGETHER TO PREVENT POTENTIAL FLOW–THROUGH OF SEDIMENT AT THE JOINT. THE TOPS OF THE POSTS SHALL BE SECURED TO EACH OTHER WITH WIRE.
7. FOR EACH END POST, FENCE FABRIC SHALL BE FOLDED AROUND TWO POSTS ONE FULL TURN AND SECURED WITH 4 STAPLES.
8. MINIMUM OF 4 STAPLES SHALL BE INSTALLED PER POST. DIMENSIONS SHOWN ARE TYPICAL.
9. MAINTENANCE OPENINGS SHALL BE CONSTRUCTED IN A MANNER TO ENSURE THAT SEDIMENT IS RETAINED BY THE TEMPORARY SILT FENCE.
10. JOINT SECTIONS SHALL NOT BE PLACED AT SUMP LOCATIONS.

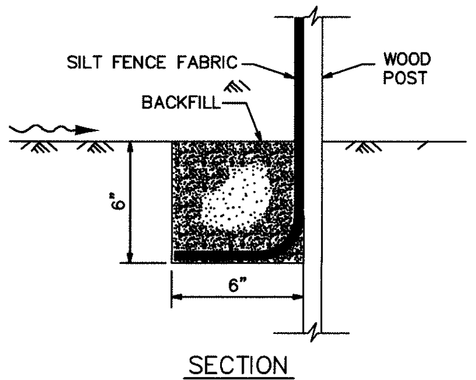

SECTION
TRENCH DETAIL

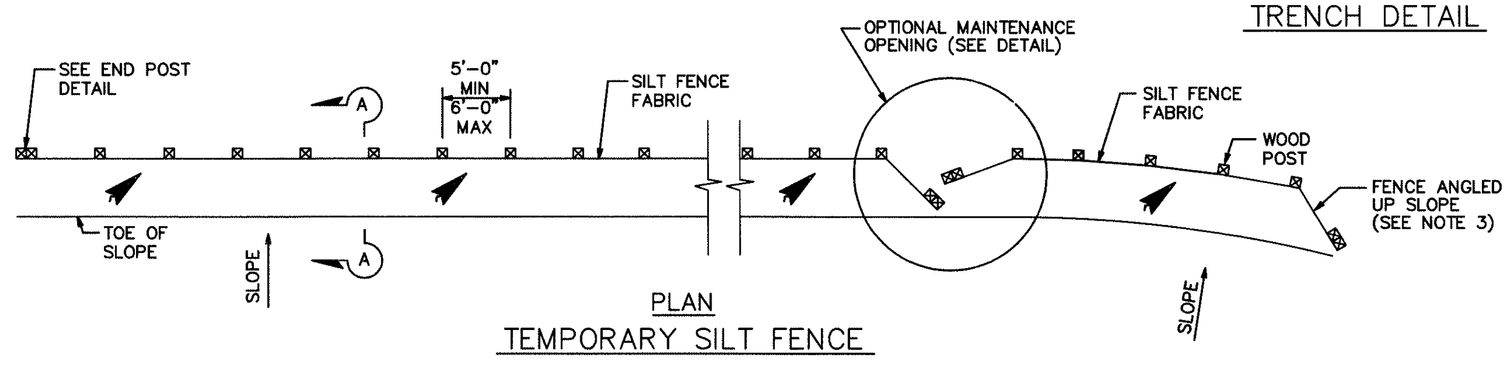

PLAN
TEMPORARY SILT FENCE

SE-1 TYPICAL SILT FENCE DETAIL
N.T.S.

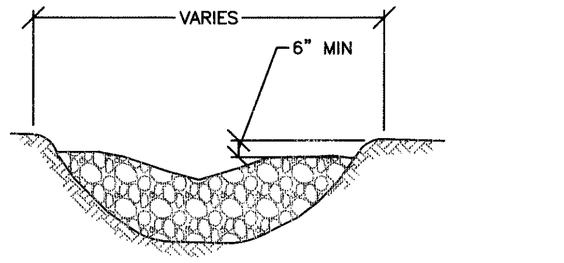

FACE OF CHECK DAM

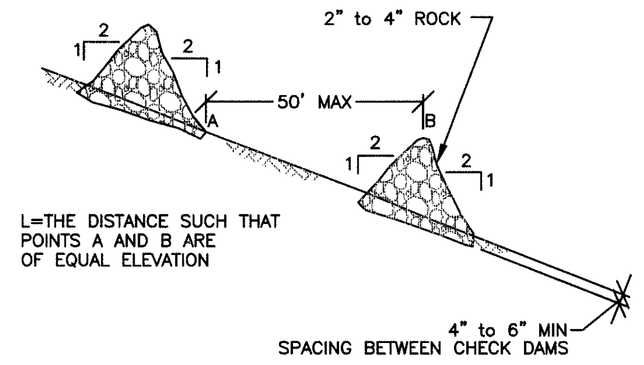

SE-4 TYPICAL CHECK DAM DETAIL
N.T.S.

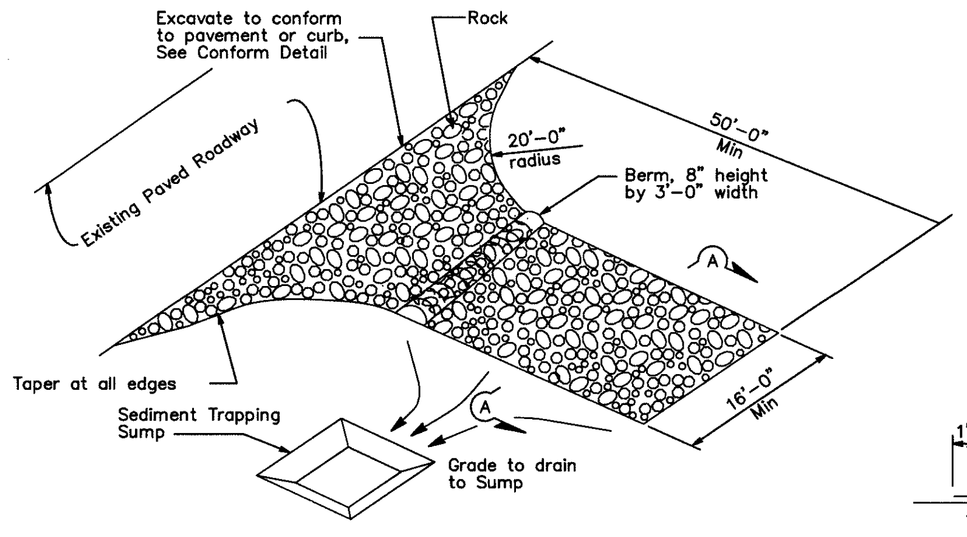

PERSPECTIVE
TEMPORARY CONSTRUCTION ENTRANCE (TYPE 1)

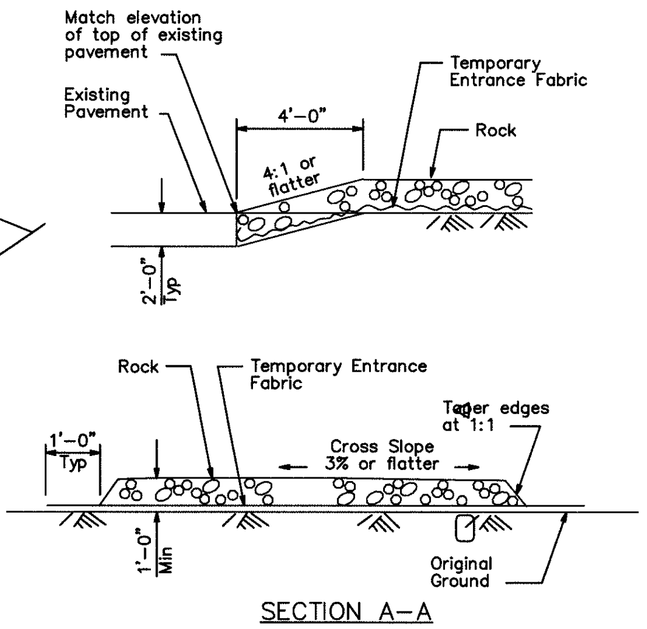

SECTION A–A

TC-1 TYPICAL CONSTRUCTION ENTRANCE/EXIT DETAIL
N.T.S.

LACO ASSOCIATES
EUREKA · UKIAH · CONCORD
CONSULTING ENGINEERS
1-800-515-5054
WWW.LACOASSOCIATES.COM

NO.	REVISION	BY	CHK	DATE
		JDB	NKT	6/27/11
	BID ADDENDUM 1	JDB	MAH	5/24/11
	100% SUBMITTAL	JDB	MAH	5/18/11
	PROGRESS SUBMITTAL #1	JDB	MAH	4/14/11
	75% SUBMITTAL	JDB	MAH	4/7/11
	DD SUBMITTAL	JDB	MAH	4/7/11

YUROK VETERANS CEMETERY
EROSION CONTROL DETAILS

BALD HILLS ROAD, HUMBOLDT COUNTY, CA
APN:531-094-005

SCALE	SCALE
DRAWN	JDB
CHECK	MAH
APPVD	MAH
DATE	4/7/11
JOB NO.	7105.03
SHEET	C14

Jun 26,2011-12:53pm
T:\Cadfiles\7100\7105 YUROK VETERANS CEMETERY\DWG\ 7105-03 Civ C14.dwg

Planting Schedule

Plant List

Planting Location	Scientific Name	Common Name	Plant Size (gallons)	Number of Plants
Road Screening	Arbutus menziesii	Pacific Madrone	15	13
Road Screening	Arctostaphylos columiana	Hairy Manzanita	5	74
Entry Way	Berberis aquifolium	Oregon Grape	1	N/A
Entry Way	Calocedrus decurrens	Incense Cedar	15	14
Entry Way	Cercis occidentalis	California Redbud	5	44
Road Screening	Chrysolepis chrysophylla	Giant Chinquapin	15	7
Entry Way	Corylus cornuta	California Hazelnut	1	7
Interior Pathway Edges	Gaultheria shallon	Salal	1	89
Entry Way	Iris innominata	Del Norte Iris	1	200
Interior Pathway Edges	Iris innominata	Del Norte Iris	1	126
Road Screening	Lithocarpus densiflora	Tan-Oak	15	16
Road Screening	Polystichum munitum	Sword Fern	1	40
Interior Pathway Edges	Polystichum munitum	Sword Fern	1	63
Road Screening	Prunus virginiana	Western Chokecherry	1	2
Road Screening	Pseudotsuga menziesii	Douglas-Fir	15	14
Interior Pathway Edges	Rosa gymnocarpa	Wood Rose	1	218
Road Screening	Rubus parviflorus	Thimbleberry	1	31
Entry Way	Symphoricarpus mollis	Snowberry	1	300
Interior Pathway Edges	Vancouveria hexandra	Inside-out Flower	1	N/A
Interior Pathway Edges	Whipplea modesta	Yerba de Santa	1	N/A

Seed List for Grass Mix

Scientific name	Seeding Density (seeds/ft²)	Average Pure Seed Weight (seeds/lb PLS)
Nassella cernua	11	215,200
Bromus carinatus	23	72,600
Festuca rubra	22	391,800
Hordeum californicum	22	135,700
Leymus triticoides	11	153,000

Planting Legend

- Pacific Madrone
- Hairy Manzanita
- Incense Cedar
- California Redbud
- Giant Chinquapin
- California Hazelnut
- Salal
- Del Norte Iris
- Tan Oak
- Sword Fern
- Western Chokecherry
- Douglas Fir
- Wood Rose
- Thimbleberry
- Snowberry
- Boulders (by Owner)
- Grass Mix (see schedule above)

Planting Notes

1. CONTRACTOR TO INSTALL 3" REDWOOD BARK AS MULCH AROUND ALL NEW PLANTINGS.
2. CONTRACTOR TO INSTALL 3' - 4' DIAMETER BOULDERS FROM LOCAL NEARBY QUARRY AS RECOMMENDED BY OWNER.
3. CONTRACTOR TO PLANT UC VERDE BUFFALO GRASS IN ALL BURIAL AREAS UNLESS NOTED OTHERWISE.

1"

GRAPHIC SCALE MEASURES 1 INCH ON FULL-SIZE PLANS.

LACO ASSOCIATES
CONSULTING ENGINEERS
21 W 4TH ST. EUREKA, CA 95501 (707)443-5054

NO.	PROJECT HISTORY	BY	CHK	DATE
5	BID ADDENDUM 1	EAL	NKT	6/27/11
4	100% SUBMITTAL	EAL	MAH	5/24/11
3	PROGRESS SUBMITTAL NO. 1	EAL	MAH	5/18/11
2	75% SUBMITTAL	EAL	MAH	4/15/11
1	DD SUBMITTAL	EAL	MAH	04/07/11

YUROK VETERANS CEMETERY

PLANTING KEY PLAN AND SCHEDULE

YUROK TRIBE
BALD HILLS RD., HUMBOLDT CO.

SCALE	AS SHOWN
DRAWN	EAL
CHECK	EAL
APPVD	NKT
DATE	05/24/2011
JOB NO.	7105.03
SHEET	L1.1

T:\Cadfiles\7100\7105 YUROK VETERANS CEMETERY\DWG\7105-03 LANDSCAPE L1.1 Planting Kye Plan & Schedule.dwg, 6/27/2011 2:32:05 AM, DWG To PDF.pc3

T:\Cadfiles\7100\7105 YUROK VETERANS CEMETERY\DWG\7105-03 LANDSCAPE L1.2 Enlarged Planting Plan.dwg, 6/27/2011 2:30:53 AM, DWG To PDF.pc3

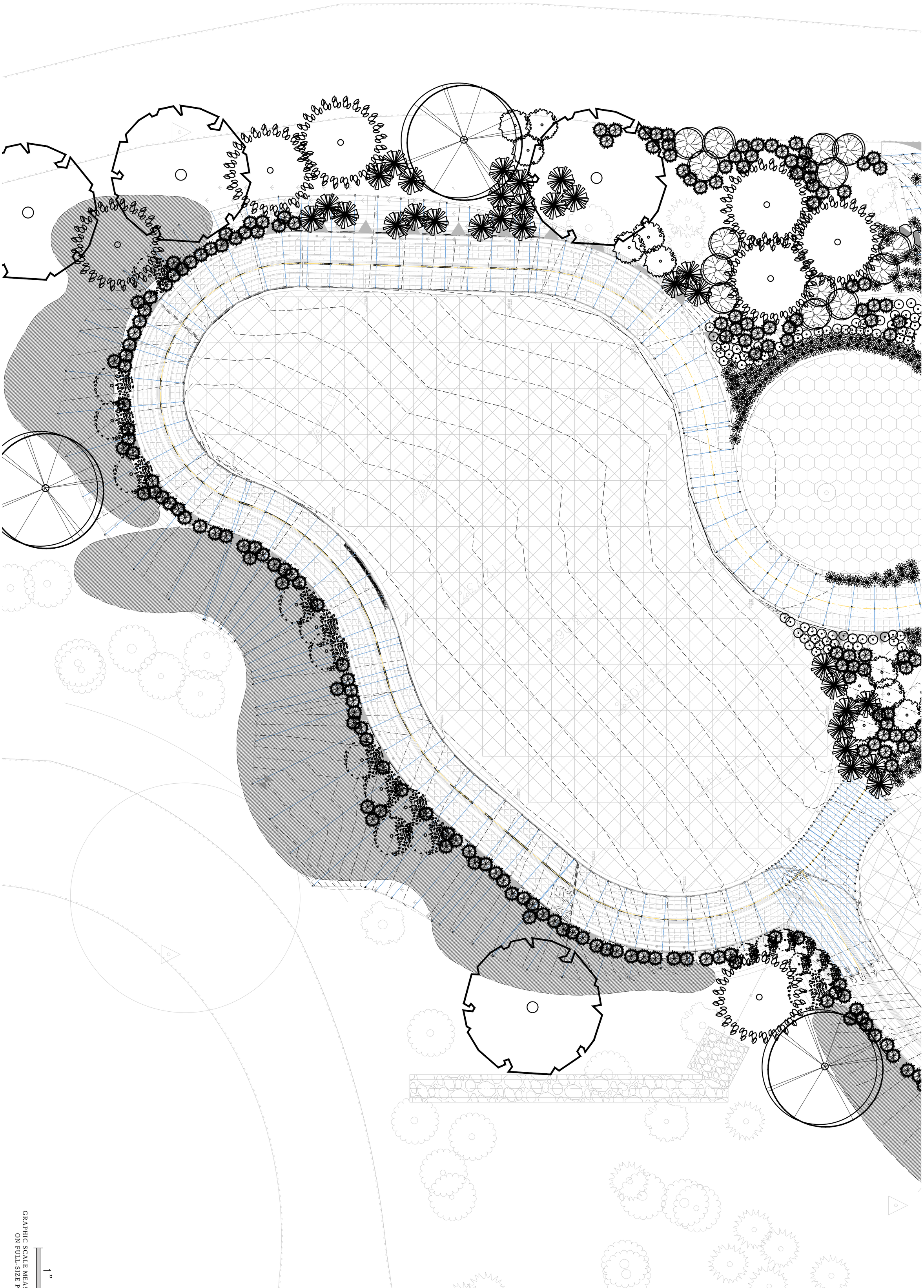

GRAPHIC SCALE MEASURES 1 INCH ON FULL-SIZE PLANS.

1"

SCALE	AS SHOWN
DRAWN	EAL
CHECK	EAL
APPVD	NKT
DATE	05/24/2011
JOB NO.	7105.03
SHEET	L1.2

YUROK VETERANS CEMETERY

ENLARGED PLANTING PLAN

YUROK TRIBE
BALD HILLS RD., HUMBOLDT CO.

NO.	PROJECT HISTORY	BY	CHK	DATE
5	BID ADDENDUM 1	EAL	NKT	6/27/11
4	100% SUBMITTAL	EAL	MAH	5/24/11
3	PROGRESS SUBMITTAL NO. 1	EAL	MAH	5/18/11
2	75% SUBMITTAL	EAL	MAH	4/15/11
1	DD SUBMITTAL	EAL	MAH	04/07/11

LACO ASSOCIATES
CONSULTING ENGINEERS
21 W 4TH ST. EUREKA, CA 95501 (707)443-5054

T:\Cadfiles\7100\7105 YUROK VETERANS CEMETERY\DWG\7105-03 LANDSCAPE L1.3 Enlarged Planting Plan.dwg, 6/27/2011 2:33:08 AM, DWG To PDF.pc3

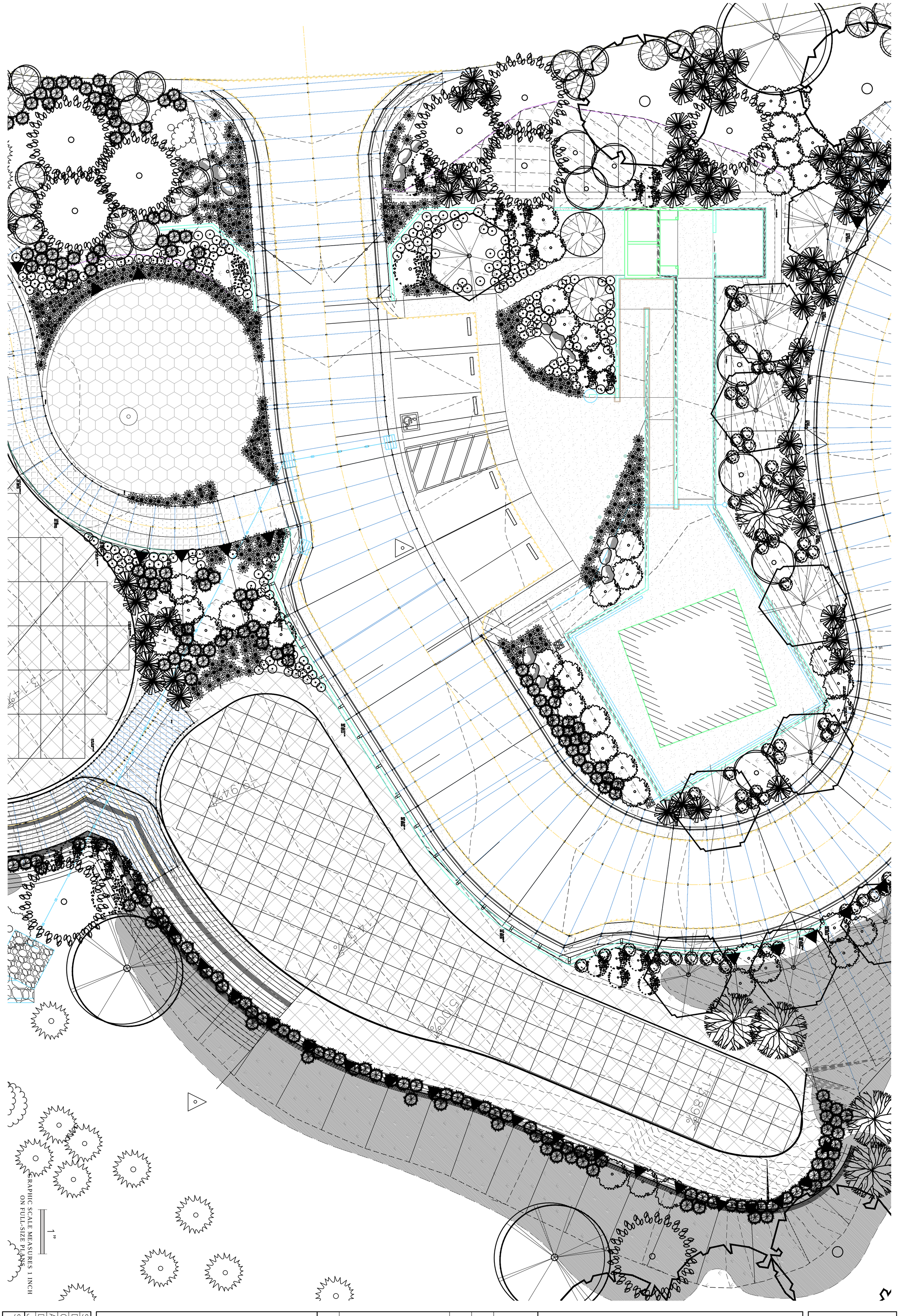

SCALE	AS SHOWN			
DRAWN	EAL			
CHECK	EAL			
APPVD	NKT			
DATE	05/24/2011			
JOB NO.	7105.03			
SHEET	L1.3			

YUROK VETERANS CEMETERY

ENLARGED PLANTING PLAN

YUROK TRIBE
BALD HILLS RD., HUMBOLDT CO.

NO.	PROJECT HISTORY	BY	CHK	DATE
5	BID ADDENDUM 1	EAL	NKT	6/27/11
4	100% SUBMITTAL	EAL	MAH	5/24/11
3	PROGRESS SUBMITTAL NO. 1	EAL	MAH	5/18/11
2	75% SUBMITTAL	EAL	MAH	4/15/11
1	DD SUBMITTAL	EAL	MAH	04/07/11

LACO ASSOCIATES
CONSULTING ENGINEERS
21 W 4TH ST. EUREKA, CA 95501 (707)443-5054

T:\Cadfiles\7100\7105 YUROK VETERANS CEMETERY\DWG\7105-03 LANDSCAPE L1.4 Enlarged Planting Plan.dwg, 6/27/2011 2:34:16 AM, DWG To PDF.pc3

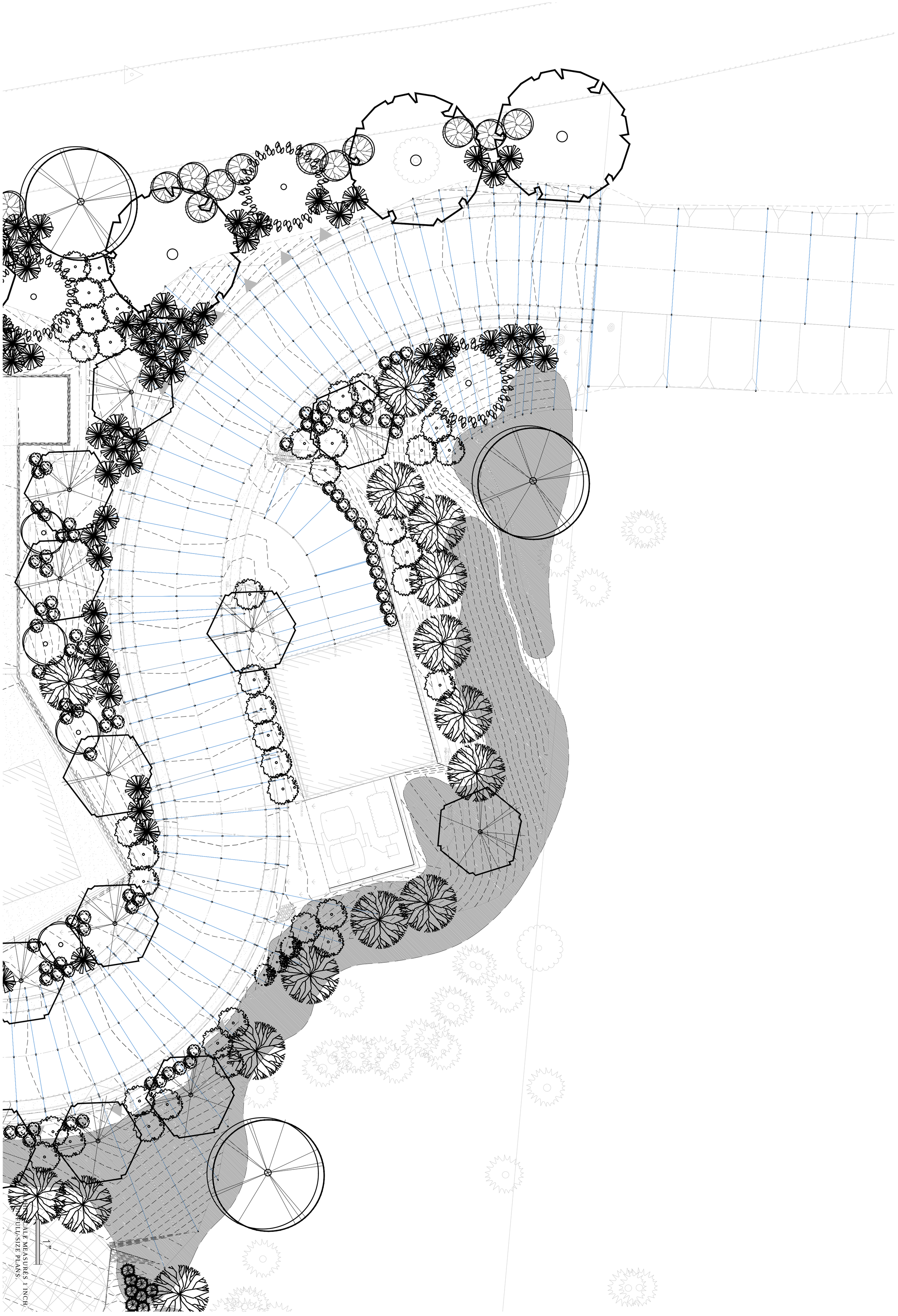

SCALE	AS SHOWN
DRAWN	EAL
CHECK	EAL
APPVD	NKT
DATE	05/24/2011
JOB NO.	7105.03
SHEET	L1.4

YUROK VETERANS CEMETERY

ENLARGED PLANTING PLAN

YUROK TRIBE
BALD HILLS RD., HUMBOLDT CO.

NO.	PROJECT HISTORY	BY	CHK	DATE
5	BID ADDENDUM 1	EAL	NKT	6/27/11
4	100% SUBMITTAL	EAL	MAH	5/24/11
3	PROGRESS SUBMITTAL NO. 1	EAL	MAH	5/18/11
2	75% SUBMITTAL	EAL	MAH	4/15/11
1	DD SUBMITTAL	EAL	MAH	04/07/11

LACO ASSOCIATES
CONSULTING ENGINEERS
21 W 4TH ST. EUREKA, CA 95501 (707)443-5054

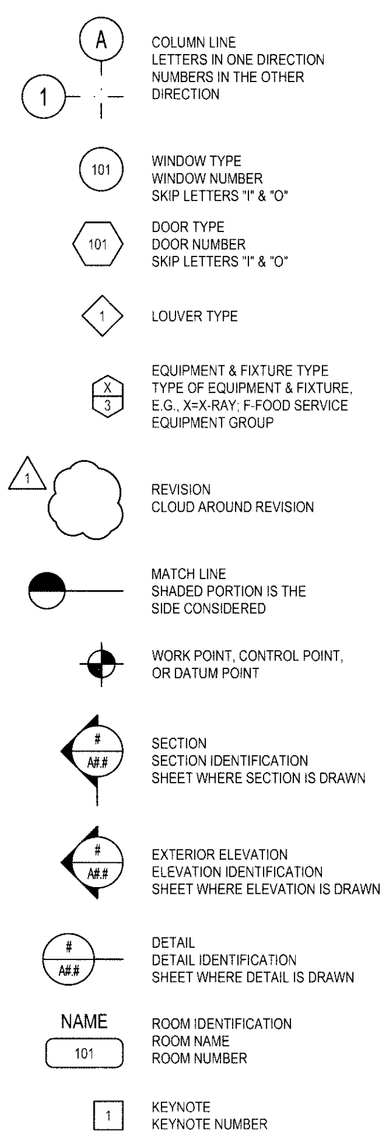

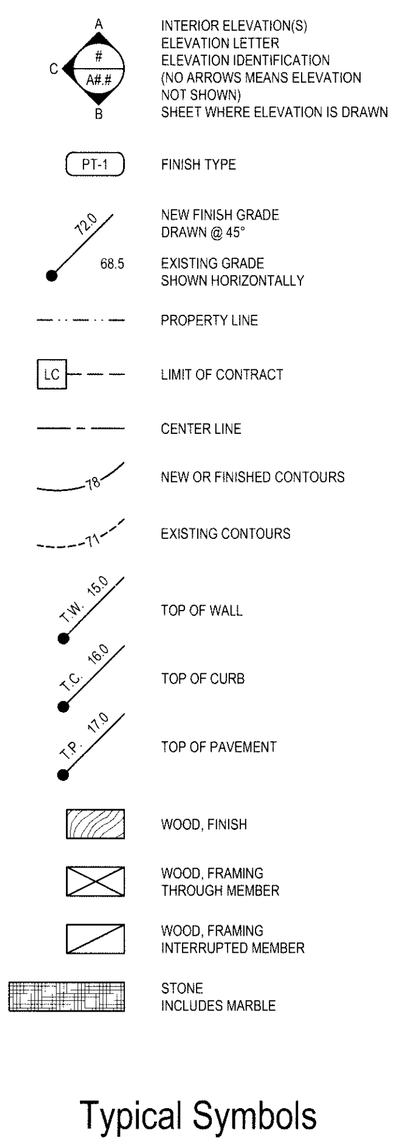

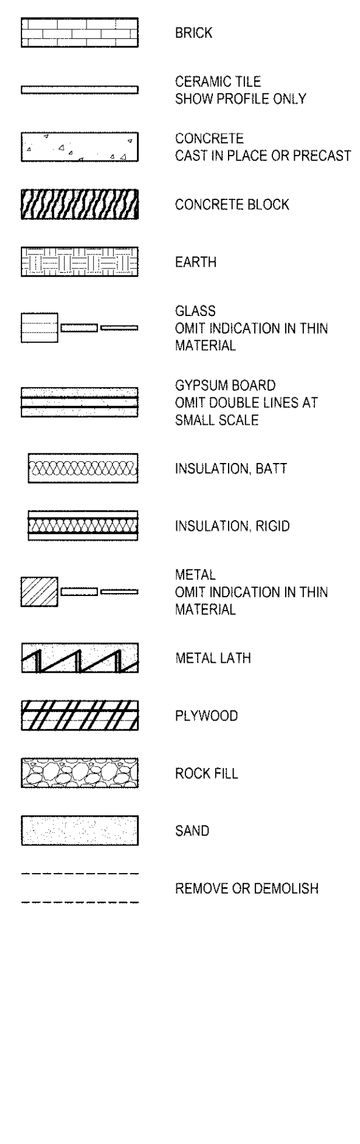

Typical Symbols

&	And
∠	Angle
@	At
℄	Centerline
Ø	Diameter or Round
#	Pound or Number
(E)	Existing
ACOUS.	Acoustical
A.D.	Area Drain
ADJ.	Adjustable
AGGR.	Aggregate
AL.	Aluminum
APPROX.	Approximate
ARCH.	Architectural
ASB.	Asbestos
ASPH.	Asphalt
BD.	Board
BITUM.	Bituminous
BLDG.	Building
BLK.	Block
BLKG.	Blocking
BM.	Beam
BOT.	Bottom
CAB.	Cabinet
C.B.	Catch Basin
CEM.	Cement
CER.	Ceramic
C.I.	Cast Iron
C.G.	Corner Guard
CLG.	Ceiling
CLKG.	Caulking
CLO.	Closet
CLR.	Clear
C.O.	Cased Opening
COL.	Column
CONC.	Concrete
CONN.	Connection
CONSTR.	Construction
CONT.	Continuous
CORR.	Corridor
CPT.	Carpet
CTSK.	Countersunk
CNTR.	Counter
CTR.	Center
DBL.	Double
DEPT.	Department
D.F.	Drinking Fountain
DET.	Detail
DIA.	Diameter
DIM.	Dimension
DISP.	Dispenser
DN.	Down
D.O.	Door Opening
DR.	Door
DWR.	Drawer
DS.	Downspout
D.S.P.	Dry Standpipe
DWGS.	Drawings
E.	East
EA.	Each
E.J.	Expansion Joint
EL.	Elevation
ELEC.	Electrical
ELEV.	Elevator
EMER.	Emergency
ENCL.	Enclosure
E.P.	Electrical Panelboard
EQ.	Equal
EQPT.	Equipment
E.W.C.	Electric Water Cooler
EXIST.	Existing
EXPO.	Exposed
EXP.	Expansion
EXT.	Exterior
F.A.	Fire Alarm
F.B.	Flat Bar
FBRD.	Fiberboard
FBGL.	Fiberglass
F.D.	Floor Drain
FDN.	Foundation
F.E.	Fire Extinguisher
F.E.C.	Fire Extinguisher Cab.
F.H.C.	Fire Hose Cabinet
FIN.	Finish
FL.	Floor
FLASH.	Flashing
FLUOR.	Fluorescent
F.O.C.	Face of Concrete
F.O.F.	Face of Finish
F.O.S.	Face of Studs
FPRF.	Fireproof
F.S.	Full Size
FT.	Foot or Feet
FTG.	Footing
FURR.	Furring
FUT.	Future
GA.	Gauge
GALV.	Galvanized
G.B.	Grab Bar
GL.	Glass
GND.	Ground
GR.	Grade
GYP.	Gypsum
H.B.	Hose Bibb
H.C.	Hollow Core
HDR.	Header
HDWD.	Hardwood
HDWE.	Hardware
HGT.	Height
H.M.	Hollow Metal
HORIZ.	Horizontal
HR.	Hour
I.D.	Inside Diameter (Dim.)
INSUL.	Insulation
INT.	Interior
JAN.	Janitor
JT.	Joint
KIT.	Kitchen
LAB.	Laboratory
LAM.	Laminate
LAV.	Lavatory
LKR.	Locker
LT.	Light
MAX.	Maximum
M.C.	Medicine Cabinet
MECH.	Mechanical
MEMB.	Membrane
MET.	Metal
MFR.	Manufacturer
MH.	Manhole
MIN.	Minimum
MIR.	Mirror
MISC.	Miscellaneous
M.O.	Masonry Opening
MTD.	Mounted
MUL.	Mullion
N.	North
N.I.C.	Not in Contract
NO. or #	Number
NOM.	Nominal
N.T.S.	Not To Scale
O.A.	Overall
OBS.	Obscure
O.C.	On Center
O.D.	Outside Diameter (Dim.)
OFF.	Office
O.H.	Overhang
OPNG.	Opening
OPP.	Opposite
PRCST.	Pre-cast
PL.	Plate
P.LAM.	Plastic Laminate
PLAS.	Plaster
PLYWD.	Plywood
PR.	Pair
PT.	Paint
P.T.	Pressure Treated
P.T.D.	Paper Towel Dispenser
P.T.D./R	Combination Paper Towel Dispenser & Receptacle
PTN.	Partition
P.T.R.	Paper Towel Receptacle
Q.T.	Quarry Tile
R.	Riser
RAD.	Radius
R.D.	Roof Drain
REF.	Reference
REFR.	Refrigerator
RGTR.	Register
REINF.	Reinforced
REQ.	Required
RESIL.	Resilient
RM.	Room
R.O.	Rough Opening
R.S.	Roof Shingles
RWD.	Redwood
R.W.L.	Rain Water Leader
S.	South
S.C.	Solid Core
S.C.D.	Seat Cover Dispenser
SCHED.	Schedule
S.D.	Soap Dispenser
SECT.	Section
SH.	Shelf
SHR.	Shower
SHT.	Sheet
SIM.	Similar
S.N.D.	Sanitary Napkin Dispenser
S.N.R.	Sanitary Napkin Receptacle
SPEC.	Specification
SQ.	Square
S.ST.	Stainless Steel
S.SK.	Service Sink
STN.	Stain
STA.	Station
STD.	Standard
STL.	Steel
STOR.	Storage
STRUCT.	Structural
SUSP.	Suspended
SYM.	Symmetrical
TRD.	Tread
T.B.	Towel Bar
T.C.	Top of Curb
TEL.	Telephone
TER.	Terrazzo
T.&G.	Tongue and Groove
THK.	Thick
T.P.	Top of Pavement
T.P.D.	Toilet Paper Dispenser
T.V.	Television
T.W.	Top of Wall
TYP.	Typical
UNF.	Unfinished
U.O.N.	Unless Otherwise Noted
UR.	Urinal
VERT.	Vertical
VEST.	Vestibule
W.	West
W/	With
W.C.	Water Closet
WD.	Wood
W/O	Without
WP.	Waterproof
WSCT.	Wainscot
WT.	Weight

Typical Abbreviations

1"

GRAPHIC SCALE MEASURES 1 INCH ON FULL-SIZE PLANS.

LACO ASSOCIATES
CONSULTING ENGINEERS
21 W 4TH ST. EUREKA, CA 95501 (707)443-5054

REGISTERED PROFESSIONAL ENGINEER — No. 70251 — Exp. 6-27-11 — CIVIL — STATE OF CALIFORNIA — 9/30/12

NO.	BY	CHK	DATE
5	EAL	NKT	6/27/11
4	EAL	MAH	5/24/11
3	EAL	MAH	5/18/11
2	EAL	MAH	4/15/11
1	EAL	MAH	04/07/11
	EAL	MAH	2/11/11
	BY	CHK	DATE

PROJECT HISTORY

1 DD SUBMITTAL
2 75% SUBMITTAL
3 PROGRESS SUBMITTAL NO. 1
4 100% SUBMITTAL
5 BID ADDENDUM 1

YUROK VETERANS CEMETERY
COVER SHEET, PROJECT INFO., STANDARDS

YUROK TRIBE
BALD HILLS RD., HUMBOLDT CO.

SCALE	AS SHOWN
DRAWN	EAL
CHECK	EAL
APPVD	NKT
DATE	05/24/2011
JOB NO.	7105.03
SHEET	**A0.1**

T:\Cadfiles\7100\7105 YUROK VETERANS CEMETERY\DWG\7105-03 ARCH A0.1 Cover Sheet & Project Info.dwg, 6/27/2011 11:55:28 AM, DWG To PDF.pc3

DIVISION 01 GENERAL REQUIREMENTS

1. CONTRACTOR SHALL ADVISE LACO AND OWNER IN WRITING OF ANY RECOMMENDED CHANGES TO THE FOLLOWING CONTRACT DOCUMENTS AND SHALL SUBMIT WRITTEN CONFIRMATION TO LACO OF ANY CHANGES AND RECEIVE LACO'S WRITTEN APPROVAL PRIOR TO ORDERING, INSTALLATION OR PROCEEDING WITH THE WORK.
2. THE WORD 'CONTRACTOR' MEANS THE GENERAL CONTRACTOR AND, WHERE APPLICABLE BY TRADE, SUBCONTRACTORS.
3. CONTRACTOR SHALL BE RESPONSIBLE FOR REVIEWING ALL CONTRACT DOCUMENTS PRIOR TO FINALIZING CONSTRUCTION CONTRACT.
4. ALL CONSTRUCTION SHALL BE COMPLETED IN FULL COMPLIANCE WITH APPLICABLE FEDERAL, STATE AND LOCAL CODES AND REQUIREMENTS, INCLUDING CURRENT AMERICANS WITH DISABILITIES ACT (ADA), TITLE 24 ENERGY, FIRE DEPARTMENT, AND HEALTH DEPARTMENT REQUIREMENTS.
5. PRIOR TO FINALIZING CONTRACT PRICES, CONTRACTOR SHALL BE RESPONSIBLE FOR REVIEWING AND COORDINATING ALL NOTES AND DRAWINGS TO INCLUDE ANY SUBCONTRACT REQUIREMENTS OR INFORMATION, WHICH MAY NOT BE INDICATED ON SUBCONTRACTOR'S SHEETS OR NOTES, BUT WHICH ARE INDICATED ELSEWHERE IN THE CONSTRUCTION DOCUMENTS. THE CONTRACTOR AND ALL SUBCONTRACTORS ARE REQUIRED TO REVIEW TO COMPLETE CONTRACT DRAWINGS.
6. CONTRACTOR SHALL VERIFY ALL WORKS, DIMENSIONS AND DETAILS AND REPORT ANY DISCREPANCIES TO THE OWNER AND LACO PRIOR TO COMMENCING WORK. DURING CONSTRUCTION, THE OWNER AND LACO ARE TO BE ADVISED REGARDING ANY DISCREPANCIES IN MEASUREMENT, DIMENSION, LOCATION OR DETAILS PRIOR TO CONTRACTOR PROCEEDING WITH THAT PORTION OF THE WORK.
7. CONTRACTOR SHALL CONSULT REPRESENTATIVES OF LOCAL UTILITIES, INCLUDING GAS, WATER, POWER, SEWER, TELEPHONE, CABLE, AND COMMUNICATIONS WHERE APPLICABLE, CONCERNING LOCATIONS AND AVAILABILITY OF UTILITIES PRIOR TO COMMENCING WORK OR CONNECTING UTILITIES, AND SHALL BE RESPONSIBLE FOR ANY DAMAGE TO EXISTING UTILITY LINES.
8. CONTRACTOR SHALL RECORD LOCATIONS AND ELEVATIONS OF ALL EXISTING AND NEW UTILITY LINES, MAINS, AND METERS ON A COPY OF THE SITE PLAN AND DELIVER TO LACO ON COMPLETION OF CONSTRUCTION.
9. CONTRACTOR SHALL CONFIRM ANY DISCREPANCIES BETWEEN DRAWINGS, SPECS, AND JOB SITE CONDITIONS WITH LACO PRIOR TO STARTING ANY PORTIONS OF THE WORK AFFECTED.
10. WRITTEN DIMENSIONS SHALL PREVAIL OVER SCALED DIMENSIONS ON DRAWINGS. IN NO EVENT IS A DIMENSION TO BE SCALED OFF THE DRAWINGS WITHOUT PRIOR APPROVAL FROM LACO.
11. DETAILS ARE INTENDED TO SHOW FINAL EFFECT OF PARTS OF CONSTRUCTION. MINOR MODIFICATIONS MAY BE REQUIRED TO SUIT PARTICULAR JOB SITE DIMENSIONS OR CONDITIONS AND SHALL BE INCLUDED WITHIN THE SCOPE OF THE WORK AND CONSTRUCTION CONTRACT. ANY MODIFICATIONS REQUIRED IN DETAILS ARE TO BE FIRST REVIEWED AND CONFIRMED WITH BY AND WITH LACO PRIOR TO CONSTRUCTION.
12. CONTRACTOR SHALL KEEP PREMISES SECURE, CLEAN, AND HAZARD FREE. CONTRACTOR SHALL BE RESPONSIBLE FOR MAINTAINING THEIR EQUIPMENT, MATERIALS AND WORK IN NEAT, CLEAN, ORDERLY, AND SAFE CONDITIONS AT ALL TIMES. ANY INTERIOR OF BUILDINGS SHALL BE KEPT AS CLEAN AS POSSIBLE DURING CONSTRUCTION.
13. CONTRACTOR SHALL ERECT AND MAINTAIN TEMPORARY BARRICADES, WATERPROOFING AND DUST-PROOF PARTITIONS AS NEEDED FOR PROTECTION AGAINST ACCIDENT, AND SHALL CONTINUOUSLY MAINTAIN ADEQUATE PROTECTION OF THEIR WORK AND THE OWNER'S PROPERTY FROM DAMAGE OR LOSS ARISING IN CONNECTION WITH CONSTRUCTION.
14. CONTRACTOR SHALL PROVIDE AND MAINTAIN TEMPORARY TOILET FACILITIES ON THE JOB SITE DURING CONSTRUCTION.
15. CONTRACTOR SHALL REVIEW ALL ITEMS NOTED " VERIFY OR CONFIRM WITH OWNER OR LACO" WHICH MIGHT AFFECT COSTS PRIOR TO FINALIZING CONSTRUCTION CONTRACT AND SUBCONTRACTS, AND SHALL CONFIRM FINAL DECISIONS REGARDING SELECTION, MATERIALS, COLOR, FINISH OR OTHER SPECIFICATIONS NOT YET DECIDED REGARDING THESE ITEMS. . CONTRACTOR SHALL INCLUDE THE COST OF THESE ITEMS WITHIN THE ORIGINAL CONTRACT PRICE.
16. UNLESS ITEMS ARE SPECIFICALLY ITEMIZED AS NOT INCLUDED IN CONTRACT (N.I.C.), THEY WILL BE ASSUMED TO BE INCLUDED IN THE BID OR CONTRACT PRICE.
17. ANY ALLOWANCE ITEMS SHALL BE SPECIFICALLY IDENTIFIED AS ALLOWANCES AND INCLUDED IN THE BID OR CONTRACT PRICE.
18. PRODUCTS SPECIFIED OR INDICATED ON DRAWINGS ARE PRODUCTS DESIRED BY OWNER AND LACO AND SHALL BE UTILIZED UNLESS CONTRACTOR OBTAINS LACO'S AND OWNER'S ACCEPTANCE IN WRITING OF ANY SUBSTITUTIONS, OR EQUALS. NO PRODUCT WILL BE CONSIDERED AFTER BID TIME, OTHER THAN THAT WHICH HAS BEEN SPECIFIED, WITHOUT LACO'S AND OWNER'S APPROVAL. CONTRACTOR CAN REQUEST A SUBSTITUTION IN WRITTEN FORM NO LATER THAN THIRTY (30) DAYS AFTER START OF CONSTRUCTION. THE LETTER SHALL GIVE THE REASONS AND JUSTIFICATIONS FOR THE REQUEST FOR SUBSTITUTION, INCLUDING ANY ADJUSTMENTS TO COST. SUBSTITUTIONS ARE SUBJECT TO LACO'S REVIEW. CONTRACTOR SHALL WARRANT THAT SUBSTITUTIONS ARE ACCEPTABLE BY GOVERNING AUTHORITIES, AND ARE EQUAL IN PERFORMANCE TO PRODUCT SPECIFIED. THE GENERAL CONTRACTOR SHALL REIMBURSE LACO FOR LABOR AND OTHER COSTS INVOLVED IN PROVIDING RESEARCH, ADDITIONAL DRAWINGS, DETAILS, OR ENGINEERING TO REVIEW SUBSTITUTIONS OR TO ADJUST THE DESIGN OR CONSTRUCTION DOCUMENTS DUE TO ERRORS, CHANGES, OR SUBSTITUTIONS MADE BY CONTRACTOR DURING CONSTRUCTION. SUCH REIMBURSEMENTS SHALL NOT BE INCLUDED IN THE PROJECT CONSTRUCTION COST AND SHALL BE PAID BY THE CONTRACTOR WITHOUT REIMBURSEMENT FROM THE OWNER. WHEN REQUESTED, LACO SHALL SUBMIT A FEE AGREEMENT TO CONTRACTOR. A PAYMENT OF 50% OF THE FEE SHALL BE REQUIRED PRIOR TO COMMENCEMENT OF WORK. SUBSTITUTION REQUESTED ON BASIS OF DELIVERY DATES THAT MAY CAUSE PROJECT'S COMPLETION DATE TO BE DELAYED, DUE TO CONTRACTOR'S TARDINESS IN NOT ORDERING THE SPECIFIED PRODUCT ON TIME, WILL NOT BE CONSIDERED.
19. CONTRACTOR SHALL BE RESPONSIBLE FOR SUPERVISING THAT ALL GENERAL AND SUBCONTRACT WORK IS BEING ACCOMPLISHED ACCORDING TO THE MOST CURRENT CONSTRUCTION DOCUMENTS, INCLUDING REVISIONS. NO CHANGES IN CONTRACT SUM WILL BE ALLOWED FOR CORRECTION OF WORK NOT DONE ACCORDING TO MOST RECENT DRAWINGS.
20. CONTRACTOR SHALL NOT USE ANY POTENTIALLY HAZARDOUS MATERIALS OR PRODUCTS IN THE CONSTRUCTION, AND SHALL ADVISE OWNER OF ANY POTENTIALLY HAZARDOUS MATERIALS OR PRODUCTS RECOMMENDED, SELECTED, OR SPECIFIED PRIOR TO PURCHASING OR INSTALLING.
21. CONTRACTOR SHALL PROVIDE PROPER VENTILATION, CLEARANCES AND FIRE PROTECTION FOR ALL NEW FIREPLACES, OVENS, HOT WATER HEATERS, FURNACES, VENTS AND FLUES AS REQUIRED BY THE DRAWINGS, SPECIFICATIONS AND BUILDING FIRE AND HEALTH DEPARTMENT CODES.
22. CONTRACTOR SHALL PROVIDE THE OWNER WITH RECORD DRAWINGS INDICATING ALL ARCHITECTURAL, STRUCTURAL, CIVIL, AND DIMENSIONAL CHANGES AND INDICATING THE LOCATION AND SIZE OF ALL UNDERGROUND CHANGES AND THE LOCATIONS OF ALL UNDERGROUND INSTALLATIONS NOT COVERED IN ORIGINAL DRAWINGS, CHANGE ORDERS, SUPPLEMENTAL DRAWINGS OR IN SHOP DRAWINGS. THE CONTRACTOR SHALL SUBMIT COMPLETED RECORD DRAWINGS TO LACO FOR THEIR REVIEW. SUCH REVIEW SHALL NOT RELIEVE CONTRACTOR OF THEIR RESPONSIBILITIES FOR THE ACCURACY OR COMPLETENESS OF THE INFORMATION RECORDED. CONTRACTOR SHALL MAINTAIN A SET OF "AS BUILT" DRAWINGS ON SITE TO RECORD ACTUAL CONDITIONS OF THE BUILT CONSTRUCTION AS THEY OCCUR.
23. THE CONTRACTOR SHALL SUBMIT, WITH SUCH PROMPTNESS AS TO CAUSE NO DELAY IN THEIR OWN WORK OR IN THAT OF ANY OTHER SUBCONTRACTOR, FIVE REPRODUCIBLE COPIES OF ALL SHOP OR SETTING DRAWINGS AND SCHEDULES REQUIRED FOR THE WORK OF THE VARIOUS TRADES, AND SAMPLES, TEMPLATES AND MODELS AS REQUIRED, AND LACO SHALL REVIEW THEM WITH REASONABLE PROMPTNESS. THE CONTRACTOR SHALL MAKE ANY CORRECTIONS REQUIRED BY LACO, AND FILE FIVE (5) CORRECTED PRINT COPIES, UNLESS OTHERWISE NOTED, AND FURNISH SUCH OTHER COPIES AS MAY BE NEEDED.
24. SHOW DRAWINGS (SD), MANUFACTURER'S SPECIFICATIONS (MS), OR SAMPLES (S) ARE REQUIRED FOR THE FOLLOWING ITEMS, SEE NOTES ON SPECIFIC ITEMS FOR ADDITIONAL REQUIREMENTS:
   - 24.1. STRUCTURAL TRUSSES (SD)
   - 24.2. MISCELLANEOUS AND/ OR DECORATIVE IRONWORK (SD & S)
   - 24.3. CABINETRY, RAILINGS AND SPECIAL MILLWORK ITEMS (SD & S)
   - 24.4. SKYLIGHT (MS & SD)
   - 24.5. TILE AND GROUT (MS & S)
   - 24.6. ROOFING (MS & S)
   - 24.7. SHEET METAL, GUTTERS AND DOWN SPOUTS (SD & S)
   - 24.8. DOORS AND WINDOWS (SD, MS & S)
   - 24.9. FINISH HARDWARE (MS & S)
   - 24.10. CARPET AND FINISHED CONCRETE (S)
   - 24.11. MECHANICAL EQUIPMENT (SD & MS)
   - 24.12. THERMOSTATS, MECHANICAL REGISTERS AND DIFFUSERS (MS & S)
   - 24.13. PLUMBING FIXTURES AND FITTING (MS)
   - 24.14. ELECTRICAL EQUIPMENT AND DEVICES (MS & S)
   - 24.15. PAINTS AND STAINS (MS & S)
   - 24.16. ANY OTHER SPECIALTY ITEMS REQUIRING ARCHITECT'S DESIGN APPROVAL (SD, MS &/OR S)
   - 24.17. FINISH MATERIALS (S)

DIVISION 02 EXISTING CONDITIONS

1. FOR NEW ADDITIONS, PRIOR TO FORMING AND POURING CONCRETE, CONTRACTOR SHALL STAKE OUT ALL FOUNDATIONS AND PERIMETER WALL LINES AS SHOWN ON PLANS FOR LACO'S REVIEW, CONFIRM EXISTING AND NEW STRUCTURE AND PROPERTY LINE LOCATIONS AND ELEVATIONS, AND VERIFY PROPER SETBACKS AND CLEARANCES REQUIRED BY LOCAL CODES.

DIVISION 03 CONCRETE

1. CONTRACTOR TO USE ENVIRONMENTALLY SAFE FORM RELEASE AGENT,' EZKOTE' OR APPROVED EQUAL.
2. ALL CONCRETE FLOOR SLABS SHALL BE POURED OVER 2" OF SAND OVER A CONTINUOUS 6 MIL. WATERPROOF MEMBRANE OVER 4" CRUSHED ROCK ON NATURAL, COMPACTED, OR ENGINEERED SOIL. FOR SLABS SET BELOW EXTERIOR GRADES, THE CRUSHED ROCK BED SHALL BE DRAINED TO STORM DRAIN SYSTEM OR RELIEVED AT PERIMETER WITH A PERFORATED PIPE CONNECTED TO APPROVED STORM DRAIN SYSTEM OR STREET TO PREVENT SUB-FLOOR SATURATION.
3. ANY LANDSCAPE OR PLANTER RETAINING WALLS AGAINST EARTH WHICH ARE SPECIFIED WITHOUT PERIMETER DRAINS SHALL BE PROVIDED WITH ADEQUATE WEEP HOLES SURROUNDED ON THE BACKSIDE BY A MINIMUM 6" OF GRAVEL BACKFILL AT BASE OF WALL. ALL ENCLOSED PLANTERS SHALL BE WATERPROOFED ON THE INSIDE AND SUPPLIED WITH BOTTOM DRAINS CONNECTED TO STORM DRAIN SYSTEM.
4. PATCHING OF CONCRETE SLABS SHALL BE PERFORMED SO AS TO LEAVE THE PATCH SURFACE LEVEL WITH AND MATCHING THE EXISTING ADJACENT SLAB.
5. CONTRACTOR SHALL PROVIDE POSITIVE DRAINAGE OF ALL FINISHED GRADE SURFACES, SIDEWALKS AND PATIOS AWAY FROM STRUCTURES AND VERIFY THAT ALL AREAS AFFECTED BY CONSTRUCTION ARE PROPERLY DRAINED, WITH NO PONDING.
6. CONTRACTOR SHALL ADVISE LACO 24 HOURS PRIOR TO ANY CONCRETE POURS. CONTRACTOR SHALL PERFORM A STANDARD SLUMP TEST ON ALL CONCRETE FOR LACO'S INSPECTION PRIOR TO POURING ANY CONCRETE.

DIVISION 04 MASONRY

1. MARBLE OR GRANITE WORK SHALL BE IN ACCORDANCE WITH THE MASONRY INSTITUTE OF AMERICA AND BUILDING STONE INSTITUTE GUIDELINES. VERIFY ALL CORNER, EDGE, SPLASH, AND OTHER DETAILS WITH LACO PRIOR TO STARTING CONSTRUCTION.
2. ALL PAVERS SHALL BE 'CULTURED STONE' 'WATER WASH PATIO PAVERS'; CONTRACTOR TO SUBMIT TO LACO PHYSICAL SAMPLES OF PRODUCT AND COLOR CHARTS FOR SELECTION PRIOR TO CONSTRUCTION.

DIVISION 05 METALS

1. THIS DIVISION NOT USED

DIVISION 06 WOOD, PLASTICS, AND COMPOSITES

1. IN ADDITION TO ANY STRUCTURAL GRADE REQUIREMENTS, ALL EXPOSED WOOD BEAMS AND POSTS SHALL BE SELECTED FOR BEST APPEARANCE GRADE, WITH A MINIMUM OF KNOTS, CRACKS AND CHECKS.
2. CONTRACTOR SHALL PROVIDE ACCESS TO ALL ATTIC AREAS AND PLUMBING AS REQUIRED BY CODE AND SHALL CONFIRM ACCESS LOCATIONS WITH LACO PRIOR TO FRAMING.
3. CONTRACTOR SHALL COORDINATE FRAMING WITH PROPOSED LOCATIONS OF ELECTRICAL, MECHANICAL AND PLUMBING WORK SO AS TO AVOID CHANGES IN FRAMING WHICH MIGHT CONFLICT WITH PROPOSED EQUIPMENT, FIXTURE OR DIFFUSER LOCATIONS.
4. PROVIDE FRAMING OPENINGS FOR MEDICINE CABINETS AND RECESSED ACCESSORIES DURING ROUGH FRAMING, CONFIRMING SIZE, LOCATION AND HEIGHTS OF OPENINGS WITH LACO PRIOR TO CONSTRUCTION.
5. PROVIDE BLOCKING AS REQUIRED FOR CABINETS, TOILET PAPER HOLDERS, TOWEL BARS AND OTHER SPECIALTY ITEMS.
6. ALL EXPOSED WOOD BEAMS, DECKING OR OTHER MEMBERS INSTALLED PRIOR TO ENCLOSING THE BUILDING ENVELOPE AND COMPLETING ROOFING MEMBRANE SHALL BE PROTECTED DURING CONSTRUCTION AGAINST MOISTURE, STAINING AND OTHER DAMAGE BY PROTECTING WITH WEATHERPROOF PLASTIC WRAPPERS AND ADDITIONAL MEASURES AS MAY BE REQUIRED.
7. ALL ROOF BEAMS AND SUPPORTING POSTS SHALL BE ANCHORED TO PROVIDE RESISTANCE AGAINST UPLIFT. POSTS SHALL BE ANCHORED TO THE FOOTINGS OR UNDER-FLOOR CONSTRUCTION. ALL ANCHORAGE SHALL BE NOT LESS THAN 1/2" BOLTS OR 1/2" LAG SCREWS, UNLESS OTHERWISE NOTED BY ENGINEER OF RECORD.
8. USE KILN-DRIED FRAMING FOR ALL ROUGH-FRAMING MEMBERS, UNLESS OTHERWISE NOTED.
9. ALL CABINETRY AND MILL WORK SHALL BE ACCORDING TO CURRENT WOODWORKERS INSTITUTE OF CALIFORNIA HANDBOOK STANDARDS, PREMIUM GRADE. ALL DRAWERS AND SLIDING UNITS TO BE INSTALLED WITH FULL EXTENSION ACCURIDE #4037 (24" MAXIMUM WIDTH) AND #4025 (42" MAXIMUM WIDTH) GUIDES OR EQUAL AS APPROVED BY LACO. CONTRACTOR TO CONFIRM CABINET STYLE, CONSTRUCTION TYPE, HINGES AND HARDWARE WITH LACO PRIOR TO FINALIZING CONSTRUCTION CONTRACT. CABINET SUBCONTRACTOR SHALL SUBMIT DETAILED SHOP DRAWINGS OF ALL CABINETS, COUNTERS, AND OTHER BUILT-IN CABINETRY TO LACO FOR REVIEW. INSTALL PAIRS OF SMALL CLEAR RUBBER CUSHIONS INSIDE ALL DOORS AND DRAWER FRONTS FOLLOWING CABINET INSTALLATION.
10. ALL CUSTOM RUN WOOD MOLDINGS, PANELING AND OTHER MILLWORK SHALL BE TESTED BEFORE, DURING AND AFTER MILLING SO THE PROPER MOISTURE CONTENT (DRYNESS) IS CONSISTENTLY MAINTAINED.
11. CONTRACTOR SHALL INCLUDE IN CONSTRUCTION CONTRACT INSTALLATION OF ALL FINISH HARDWARE, INCLUDING BUT NOT LIMITED TO CABINET PULLS, KNOBS, DOOR STOPS, TOWEL BARS, TOILET PAPER HOLDERS AND OTHER MISCELLANEOUS ITEMS, REGARDLESS OF WHETHER THESE ITEMS ARE SUPPLIED BY OWNER OR AN ALLOWANCE.
12. CONTRACTOR SHALL REVIEW RAILINGS AND RAILING DETAILS WITH LACO PRIOR TO FINALIZING CONTRACT. RAILING SUBCONTRACTOR SHALL SUBMIT SAMPLES AND DETAILED SHOP DRAWINGS FOR LACO'S REVIEW PRIOR TO MANUFACTURE.

DIVISION 07 THERMAL & MOISTURE PROTECTION

1. ALL ROOFS TO BE MIN. CLASS A, 40-YEAR BONDABLE.
2. GENERAL CONTRACTOR AND ROOFING, MEMBRANE, AND FLASHING CONTRACTORS SHALL EACH FURNISH AN UNCONDITIONAL WRITTEN GUARANTEE TO OWNER COVERING ALL MATERIALS AND INSTALLATION OF ALL NEW ROOFING, FLASHING AND WATERPROOF MEMBRANES FOR A PERIOD OF 10 YEARS FOLLOWING FINAL COMPLETION OF CONSTRUCTION.
3. CONTRACTOR TO PERFORM AN INSPECTION OF THE ROOF INSTALLATION, INCLUDING ANY INSULATION AND FLASHING, AND SHALL REVIEW INSPECTION WITH OWNER, LACO AND ROOFING CONTRACTOR PRIOR TO CONSTRUCTION.
4. ROOFING UNDER-LAYMENT IN HIGH WIND AREAS SHALL BE W.R. GRACE ICE AND WATER SHIELD SELF-ADHERING MEMBRANE OR APPROVED EQUAL, PLACED DIRECTLY ON ROOF SHEATHING, IN ACCORDANCE WITH MANUFACTURERS RECOMMENDATIONS AND INSTALLATION REQUIREMENTS.
5. ALL ROOF, PARAPET, CHIMNEY AND OTHER FLASHING SHALL BE INSTALLED SO THAT THEY ARE WATER-TIGHT. CONTRACTOR TO NOTIFY LACO OF ANY POINTS WHERE WATER OR MOISTURE MAY PENETRATE FOR ADDITIONAL WATER PROTECTIVE MEASURES. PARAPET COPING CAPS SHALL BE INSTALLED SO AS TO BE CONTINUOUS WITH WELDED SEAMS, AND SHALL BE INSTALLED TO SLOPE A MINIMUM OF 1/2" PER FOOT TOWARDS THE ROOF SIDE. UNLESS SPECIFIED, SHEET METAL GAUGE SHALL BE SUFFICIENT TO WITHSTAND DENTING OR BENDING.
6. ALL COPINGS, SCUPPERS, GUTTERS, DOWNSPOUTS, LEADER BOXES OR OTHER SHEET METAL WORK SHALL BE PROPERLY FLASHED AND SHALL HAVE WELDED OR WATERPROOF JOINTS. ALL BENDS, SEAMS, SPLICES OR OTHER CONNECTIONS SHALL BE STRAIGHT, SMOOTH AND CONTINUOUS WITHOUT DIMPLES OR DENTS. UNLESS SPECIFIED, SHEET METAL GAUGE SHALL BE SUFFICIENT TO WITHSTAND DENTING OR BENDING.
7. CONTRACTOR TO PROVIDE INSULATION AS APPROVED BY LACO BETWEEN DISSIMILAR METALS.
8. ALL EXTERIOR CAULKING SHALL BE HIGHEST QUALITY EXTERIOR GRADE SILICON CAULK RECOMMENDED FOR EXTREME TEMPERATURE VARIATION. CONTRACTOR TO CONFIRM PRODUCT AND COLOR WITH LACO FOR SPECIFIC APPLICATIONS.

DIVISION 07 THERMAL & MOISTURE PROTECTION (CONTINUED)

1. USE 'SHEEPS CLOTH' DIRECTLY UNDER ALL METAL ROOFING APPLICATIONS.
2. ALL METAL ROOFING TO BE 'CUSTOM-BUILT METALS' TITAN CB-150 STANDING MECHANICAL SEAM METAL ROOFING. ALL PANELS SHALL BE 12" WIDE. CONTRACTOR TO PROVIDE LACO WITH PRODUCT SAMPLE AND COLOR CHART FOR SELECTION PRIOR TO START OF CONSTRUCTION.

DIVISION 08 OPENINGS

1. Skylights shall be Milgard or equal as approved by LACO.
2. All exterior and interior doors shall be installed with 3-1/2" pair of hinges unless noted otherwise. Verify hinge type and finish with LACO prior to ordering.
3. All exterior doors shall be weatherstripped at heads, jambs, and meeting stiles with continuous interlocking type satin nickel weatherstripping. All exterior door sills shall be provided with extruded satin nickel interlocking thresholds with concealed satin nickel hooks and rain drips. Weatherstripping shall be Pemko or equal as approved by LACO.

DIVISION 09 FINISHES

1. ALL EXPOSED WOOD TO BE SEALED AND CLEAR STAINED WITH AN ENVIRONMENTALLY-FRIENDLY PRODUCT; CONTRACTOR TO SUBMIT PRODUCT LITERATURE TO LACO FOR REVIEW AND APPROVAL PRIOR TO APPLICATION.
2. ALL CONCRETE WALL CONSTRUCTION TO RECEIVE AN INTEGRAL COLOR ADDITIVE TO THE CONCRETE MIX; CONTRACTOR TO SUBMIT TO LACO PRODUCT LITERATURE AND COLOR CHART FOR REVIEW AND APPROVAL PRIOR TO START OF CONSTRUCTION.
3. ALL CONCRETE FLATWORK TO RECEIVE AN INTEGRAL COLOR ADDITIVE TO THE CONCRETE MIX; CONTRACTOR TO SUBMIT TO LACO PRODUCT LITERATURE AND COLOR CHART FOR REVIEW AND APPROVAL PRIOR TO START OF CONSTRUCTION.
4. ALL EXPOSED METAL CONNECTORS TO BE EITHER GALVANIZED STEEL OR POWDER-COATED PER LACO'S DRAWINGS AND SPECIFICATIONS. SEE 'A' AND 'S' SHEETS FOR ADDITIONAL INFORMATION.
5. ALL CONCRETE WALL & SELECT FLATWORK CONSTRUCTION TO RECEIVE AN INTEGRAL COLOR ADDITIVE TO THE CONCRETE MIX ('DAVIS COLORS' PRODUCTS OR APPROVED EQUAL). CONTRACTOR TO SUBMIT TO LACO PRODUCT LITERATURE AND COLOR CHART FOR REVIEW AND COLOR SELECTION PRIOR TO START OF CONSTRUCTION. SEE C3.2 FOR LOCATIONS OF SELECT FLATWORK TO RECEIVE INTEGRAL COLOR.

DIVISION 10 SPECIALTIES

1. MAIN FLAGPOLE PRODUCT TO BE 'POLETECH' BRAND, MODEL 'ARCHITECTURAL GROUNDSET FLAGPOLES' #PT5010C-SBW WITH AN EXPOSED HEIGHT OF 50'-0". FLAGPOLE WILL BE OF STAINLESS STEEL AND WILL HAVE "SATIN BRUSH" FINISH. CONTRACTOR TO SUBMIT PRODUCT LITERATURE AND SHOP DRAWINGS TO LACO FOR REVIEW AND APPROVAL PRIOR TO APPLICATION.
2. AVENUE OF THE FLAGS FLAGPOLE PRODUCTS TO BE 'POLETECH' BRAND, MODEL 'ARCHITECTURAL GROUNDSET FLAGPOLES' #PT205C-SBW WITH AN EXPOSED HEIGHT OF 20'-0". FLAGPOLES WILL BE OF STAINLESS STEEL AND WILL HAVE "SATIN BRUSH" FINISH. CONTRACTOR TO SUBMIT PRODUCT LITERATURE AND SHOP DRAWINGS TO LACO FOR REVIEW AND APPROVAL PRIOR TO APPLICATION.
3. SEE SCHEDULES FOR ALL TOILET ROOM ACCESSORIES PRODUCTS, MANUFACTURERS AND MODEL NUMBERS.
4. SOLAR LIGHT FOR FLAGPOLE SHALL BE 'ANNIN' PRODUCT #742370 OR APPROVED EQUAL. CONTRACTOR TO SUBMIT PRODUCT CUT-SHEETS PRIOR TO ORDERING MATERIALS.

LACO ASSOCIATES
CONSULTING ENGINEERS
21 W 4TH ST. EUREKA, CA 95501 (707)443-5054

NO.	PROJECT HISTORY	BY	CHK	DATE
5	BID ADDENDUM 1	EAL	NKT	6/27/11
4	100% SUBMITTAL	EAL	MAH	5/24/11
3	PROGRESS SUBMITTAL NO. 1	EAL	MAH	5/18/11
2	75% SUBMITTAL	EAL	MAH	4/15/11
1	DD SUBMITTAL	EAL	MAH	04/07/11

YUROK VETERANS CEMETERY
ARCHITECTURAL SPECIFICATIONS
YUROK TRIBE
BALD HILLS RD., HUMBOLDT CO.

SCALE	AS SHOWN
DRAWN	EAL
CHECK	EAL
APPVD	NKT
DATE	05/24/2011
JOB NO.	7105.03
SHEET	A0.2

1"
GRAPHIC SCALE MEASURES 1 INCH ON FULL-SIZE PLANS.

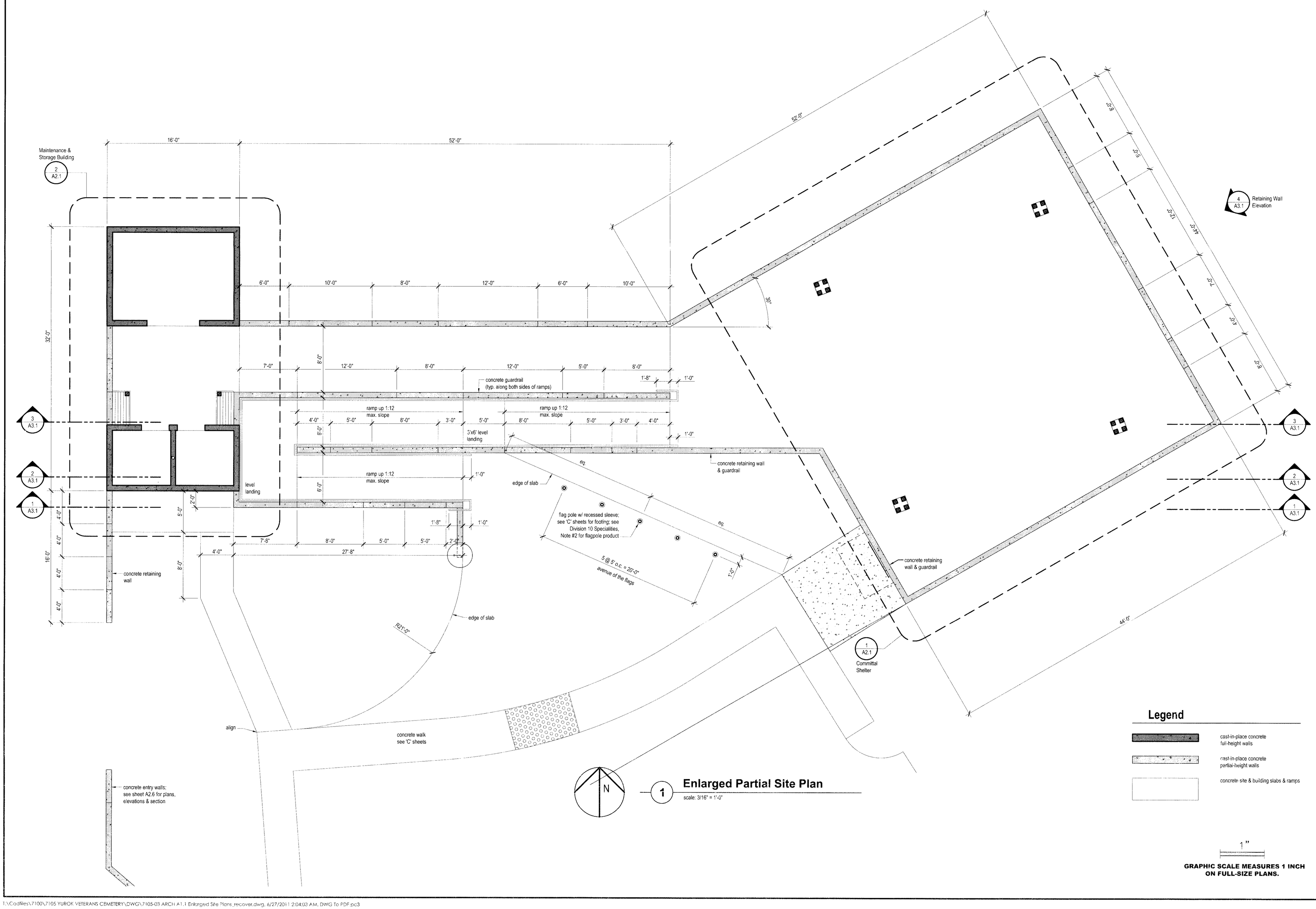

LACO ASSOCIATES
CONSULTING ENGINEERS
21 W 4TH ST. EUREKA, CA 95501 (707)443-5054

NO.	PROJECT HISTORY	BY	CHK	DATE
5	BID ADDENDUM 1	EAL	NKT	6/27/11
4	100% SUBMITTAL	EAL	MAH	5/24/11
3	PROGRESS SUBMITTAL NO. 1	EAL	MAH	5/18/11
2	75% SUBMITTAL	EAL	MAH	4/15/11
1	DD SUBMITTAL	EAL	MAH	04/07/11

YUROK VETERANS CEMETERY
BUILDINGS & SITE ELEMENTS
ENLARGED SITE PLAN

YUROK TRIBE
BALD HILLS RD., HUMBOLDT CO.

SCALE	AS SHOWN
DRAWN	EAL
CHECK	EAL
APPVD	NKT
DATE	05/24/2011
JOB NO.	7105.03
SHEET	**A1.1**

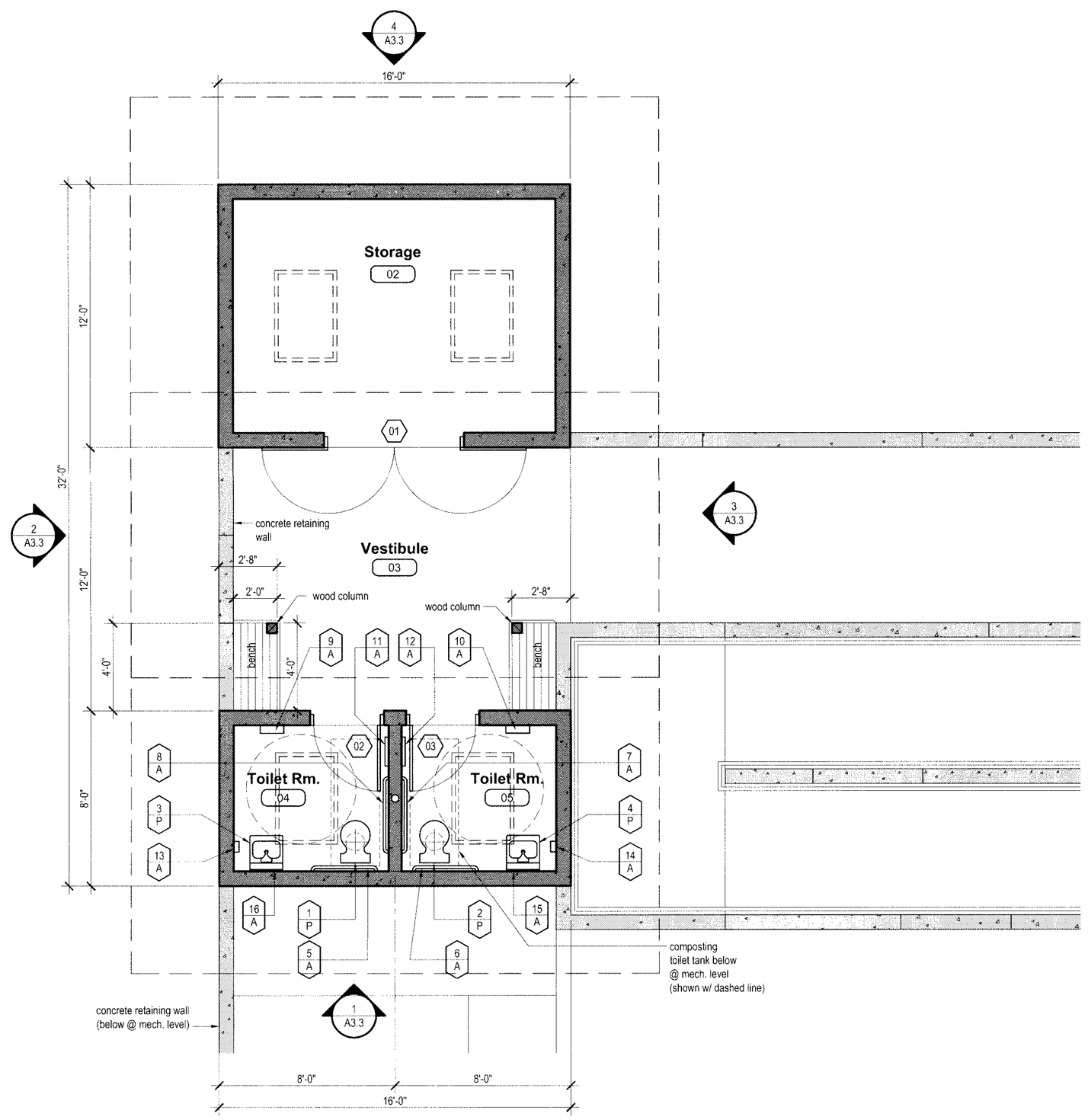

2 Floor Plan: Restrooms & Storage

scale: 1/4" = 1'-0"

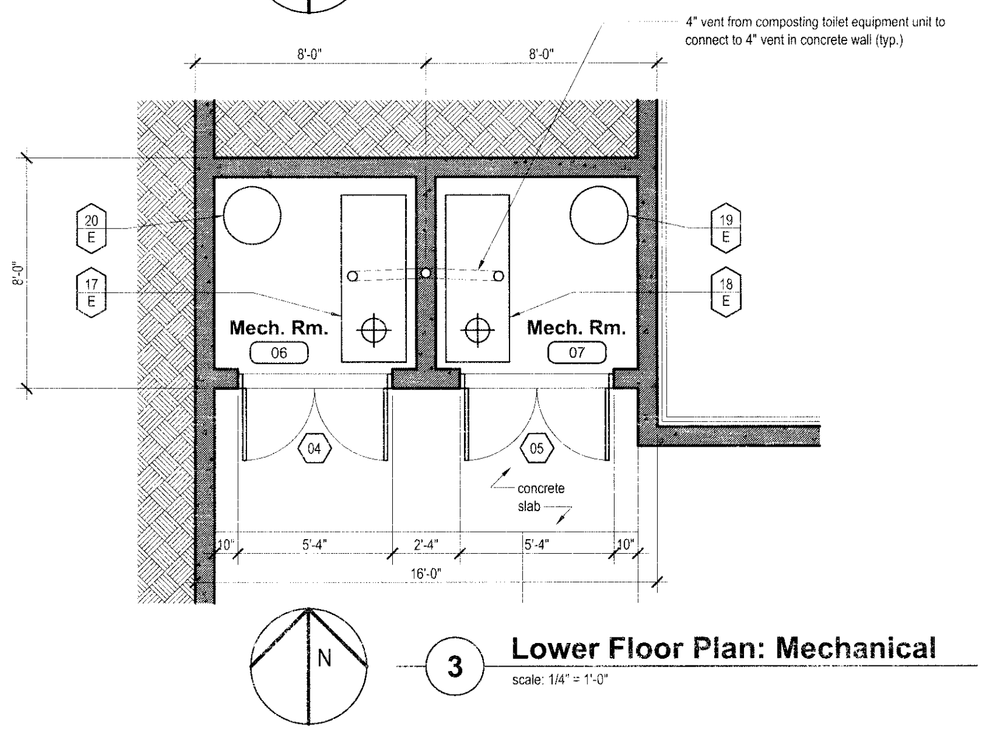

3 Lower Floor Plan: Mechanical

scale: 1/4" = 1'-0"

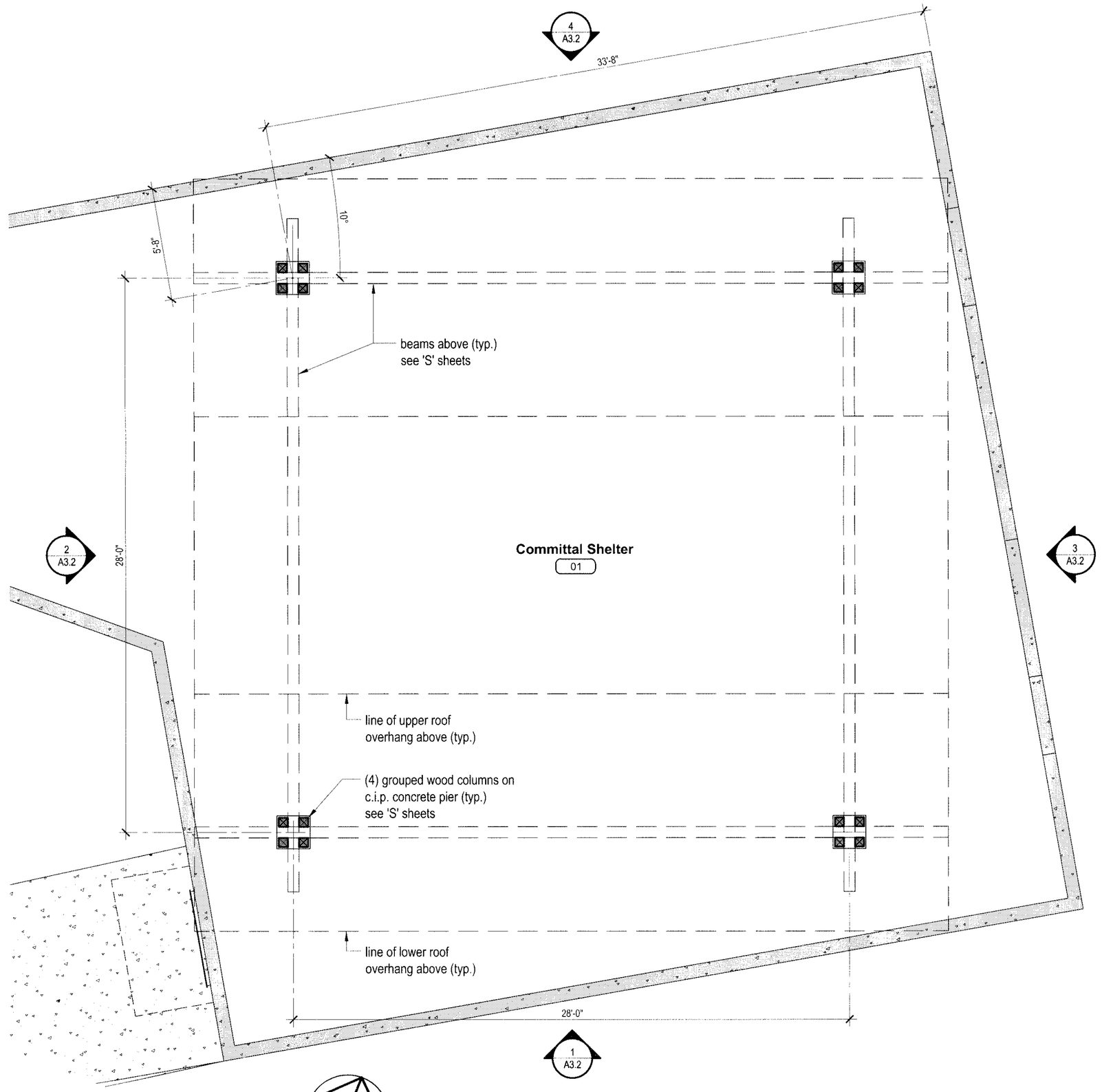

1 Floor Plan: Committal Shelter

scale: 1/4" = 1'-0"

Legend

- cast-in-place concrete full-height walls
- cast-in-place concrete partial-height walls
- concrete site & building slabs & ramps

1"

GRAPHIC SCALE MEASURES 1 INCH ON FULL-SIZE PLANS.

LACO ASSOCIATES
CONSULTING ENGINEERS
21 W 4TH ST. EUREKA, CA 95501 (707)443-5054

NO.	PROJECT HISTORY	BY	CHK	DATE
5	BID ADDENDUM 1	EAL	NKT	6/27/11
4	100% SUBMITTAL	EAL	MAH	5/24/11
3	PROGRESS SUBMITTAL NO. 1	EAL	MAH	5/18/11
2	75% SUBMITTAL	EAL	MAH	4/15/11
1	DD SUBMITTAL	EAL	MAH	04/07/11

YUROK VETERANS CEMETERY
RESTRM./STORAGE & COMMITTAL SHELTER FLOOR PLANS

YUROK TRIBE
BALD HILLS RD., HUMBOLDT CO.

SCALE	AS SHOWN
DRAWN	EAL
CHECK	EAL
APPVD	NKT
DATE	05/24/2011
JOB NO.	7105.03
SHEET	**A2.1**

T:\Cadfiles\7100\7105 YUROK VTERANS CEMETERY\DWG\7105-03 ARCH A2.1 Floor Plan - RS&CS.dwg, 6/27/2011 2:12:56 AM, DWG To PDF.pc3

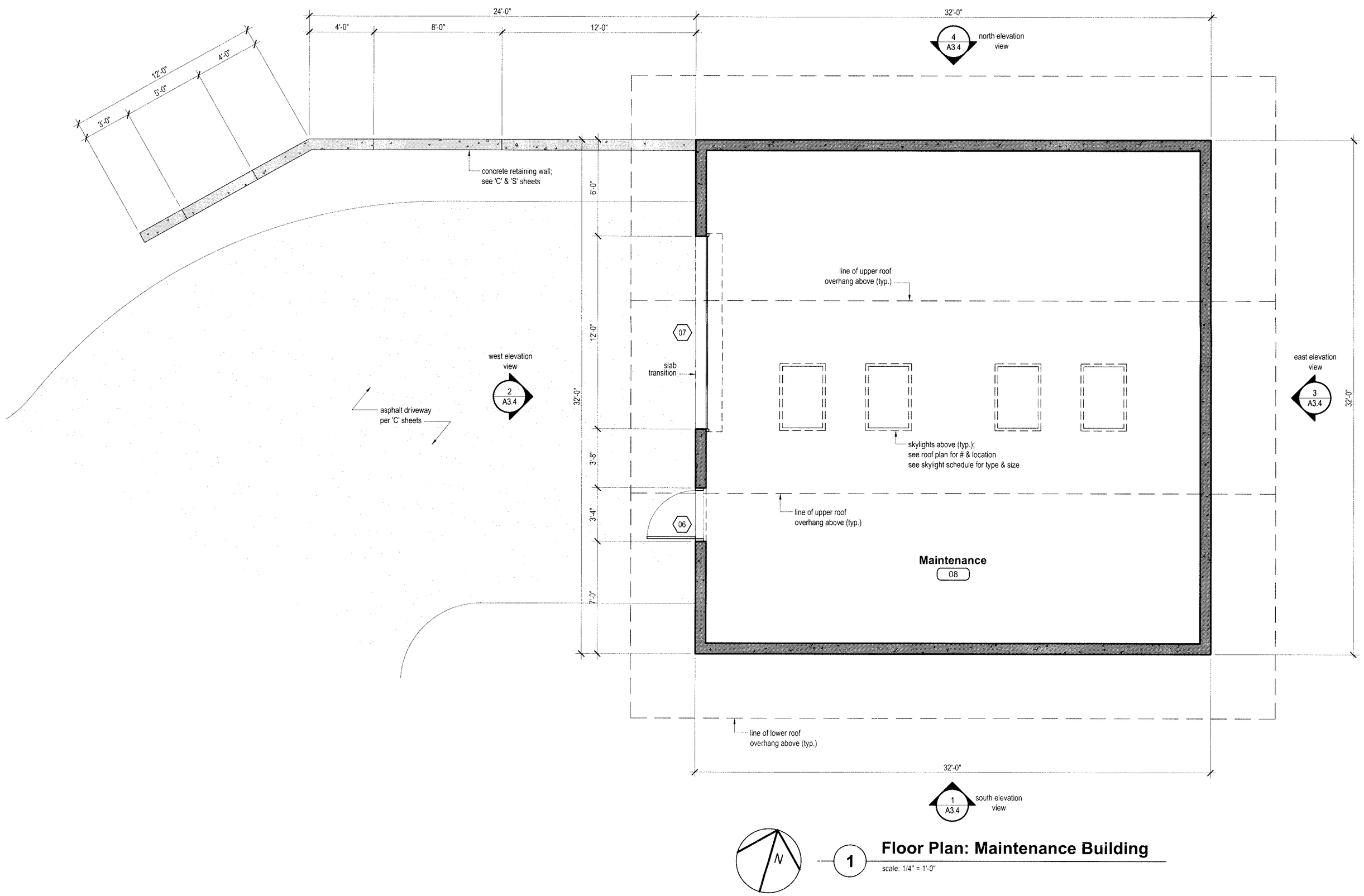

1 Floor Plan: Maintenance Building

scale: 1/4" = 1'-0"

Legend

- cast-in-place concrete full-height walls
- cast-in-place concrete partial-height walls
- concrete site & building slabs & ramps

1"

GRAPHIC SCALE MEASURES 1 INCH ON FULL-SIZE PLANS.

LACO ASSOCIATES
CONSULTING ENGINEERS
21 W 4TH ST. EUREKA, CA 95501 (707)443-5054

PROFESSIONAL ENGINEER — MARK A. HOFFER — No. 70251 — Exp. 9/30/12 — CIVIL — STATE OF CALIFORNIA

NO.	PROJECT HISTORY	BY	CHK	DATE
5	BID ADDENDUM 1	EAL	NKT	6/27/11
4	100% SUBMITTAL	EAL	MAH	5/24/11
3	PROGRESS SUBMITTAL NO. 1	EAL	MAH	5/18/11
2	75% SUBMITTAL	EAL	MAH	4/15/11
1	DD SUBMITTAL	EAL	MAH	04/07/11

YUROK VETERANS CEMETERY
MAINTENANCE BUILDING
FLOOR PLAN

YUROK TRIBE
BALD HILLS RD., HUMBOLDT CO.

SCALE	AS SHOWN
DRAWN	EAL
CHECK	EAL
APPVD	NKT
DATE	05/24/2011
JOB NO.	7105.03
SHEET	**A2.2**

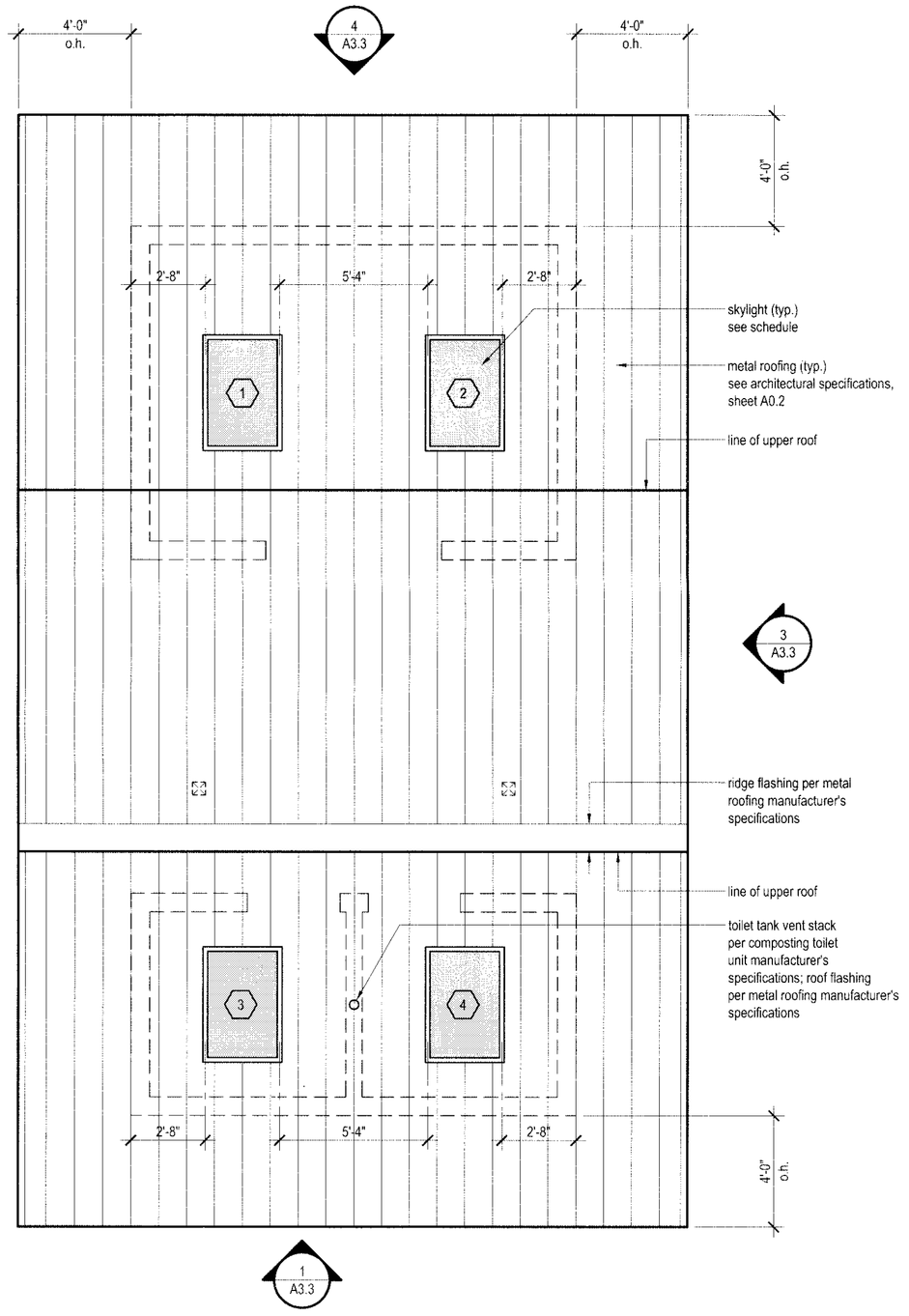

N

2 Roof Plan: Restrooms & Storage

scale: 1/4" = 1'-0"

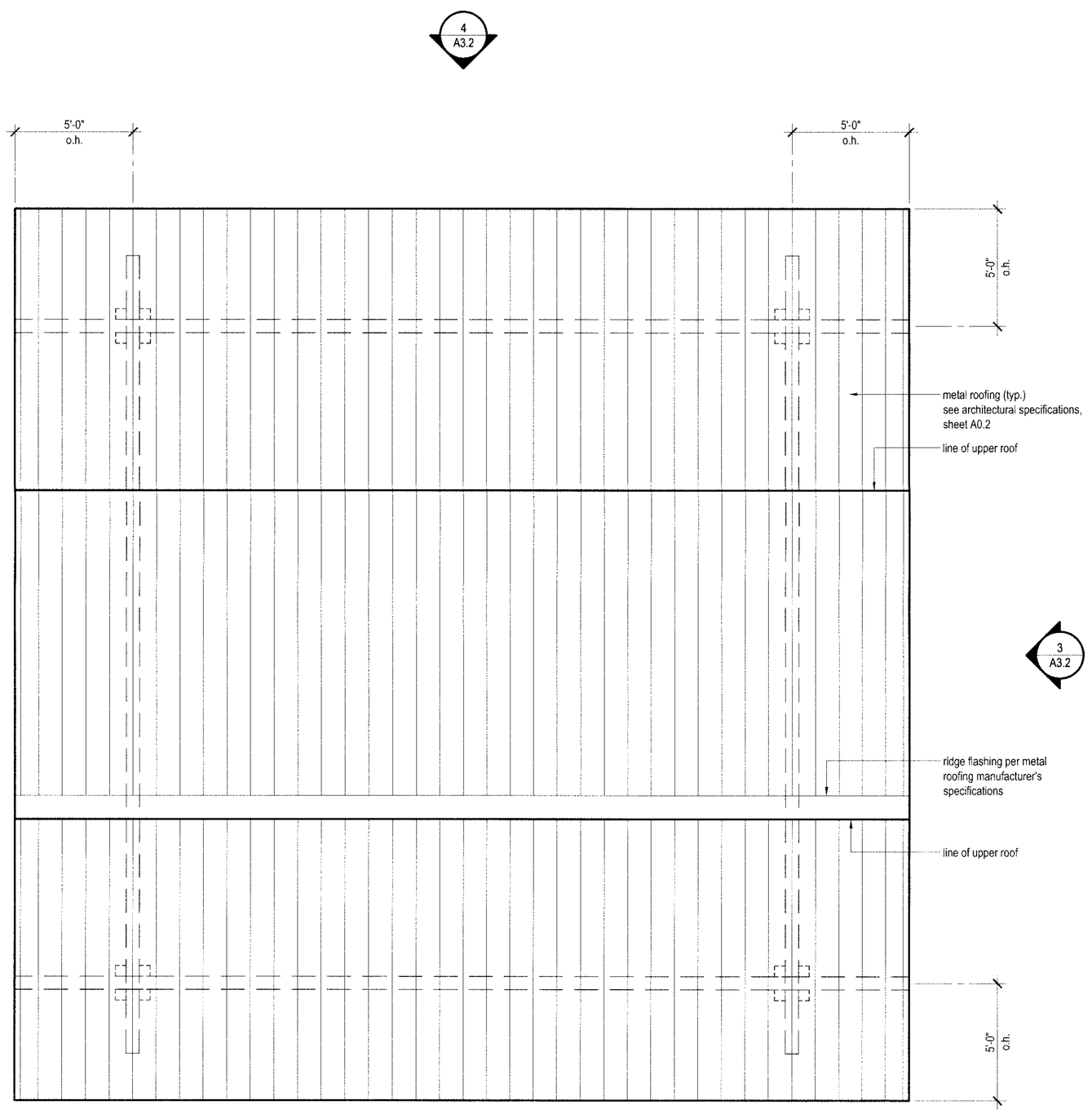

N

1 Roof Plan: Committal Shelter

scale: 1/4" = 1'-0"

1"

GRAPHIC SCALE MEASURES 1 INCH ON FULL-SIZE PLANS.

REGISTERED PROFESSIONAL ENGINEER
NICHOLAS K. TOMPKINS
No. 70251
Exp. 9/30/12
CIVIL
STATE OF CALIFORNIA

LACO ASSOCIATES
CONSULTING ENGINEERS
21 W 4TH ST. EUREKA, CA 95501 (707)443-5054

NO.	PROJECT HISTORY	BY	CHK	DATE
5	BID ADDENDUM 1	EAL	NKT	6/27/11
4	100% SUBMITTAL	EAL	MAH	5/24/11
3	PROGRESS SUBMITTAL NO. 1	EAL	MAH	5/18/11
2	75% SUBMITTAL	EAL	MAH	4/15/11
1	DD SUBMITTAL	EAL	MAH	04/07/11

YUROK VETERANS CEMETERY
RESTRM./STORAGE & COMMITTAL SHELTER
ROOF PLANS

YUROK TRIBE
BALD HILLS RD., HUMBOLDT CO.

SCALE	AS SHOWN
DRAWN	EAL
CHECK	EAL
APPVD	NKT
DATE	05/24/2011
JOB NO.	7105.03
SHEET	**A2.3**

T:\Cadfiles\7100\7105 YUROK VETERANS CEMETERY\DWG\7105-03 ARCH A2.3 Roof Plan - RS&CS.dwg, 6/27/2011 2:15:15 AM, DWG To PDF.pc3

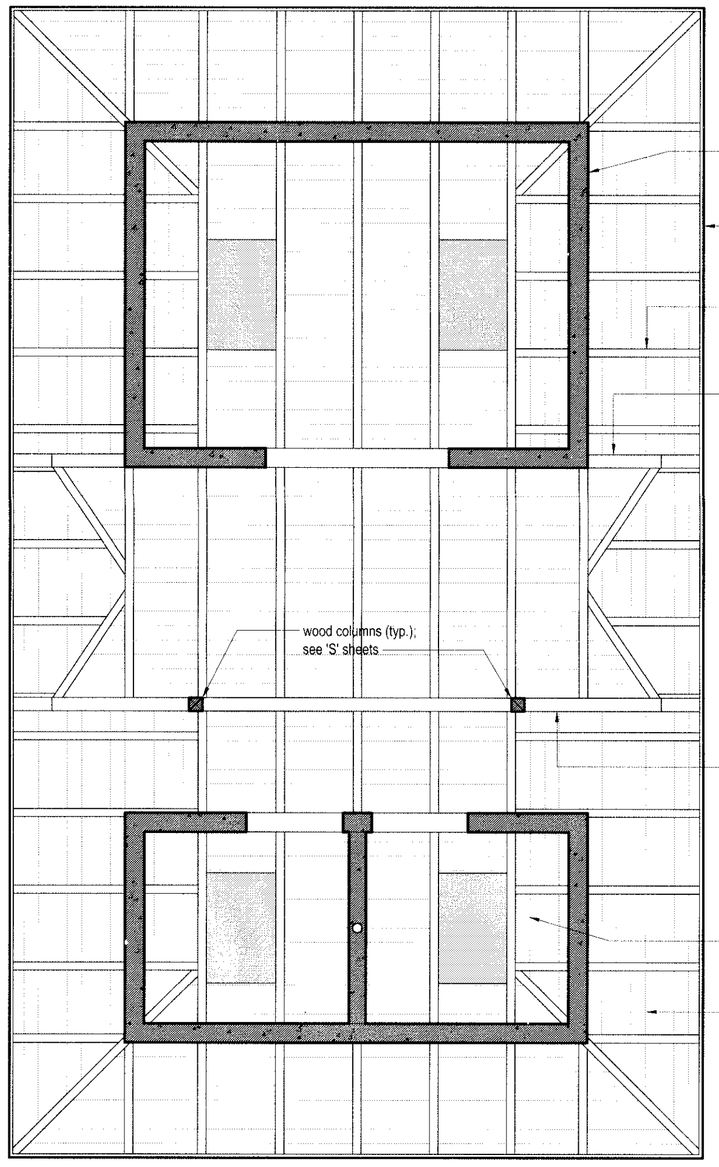

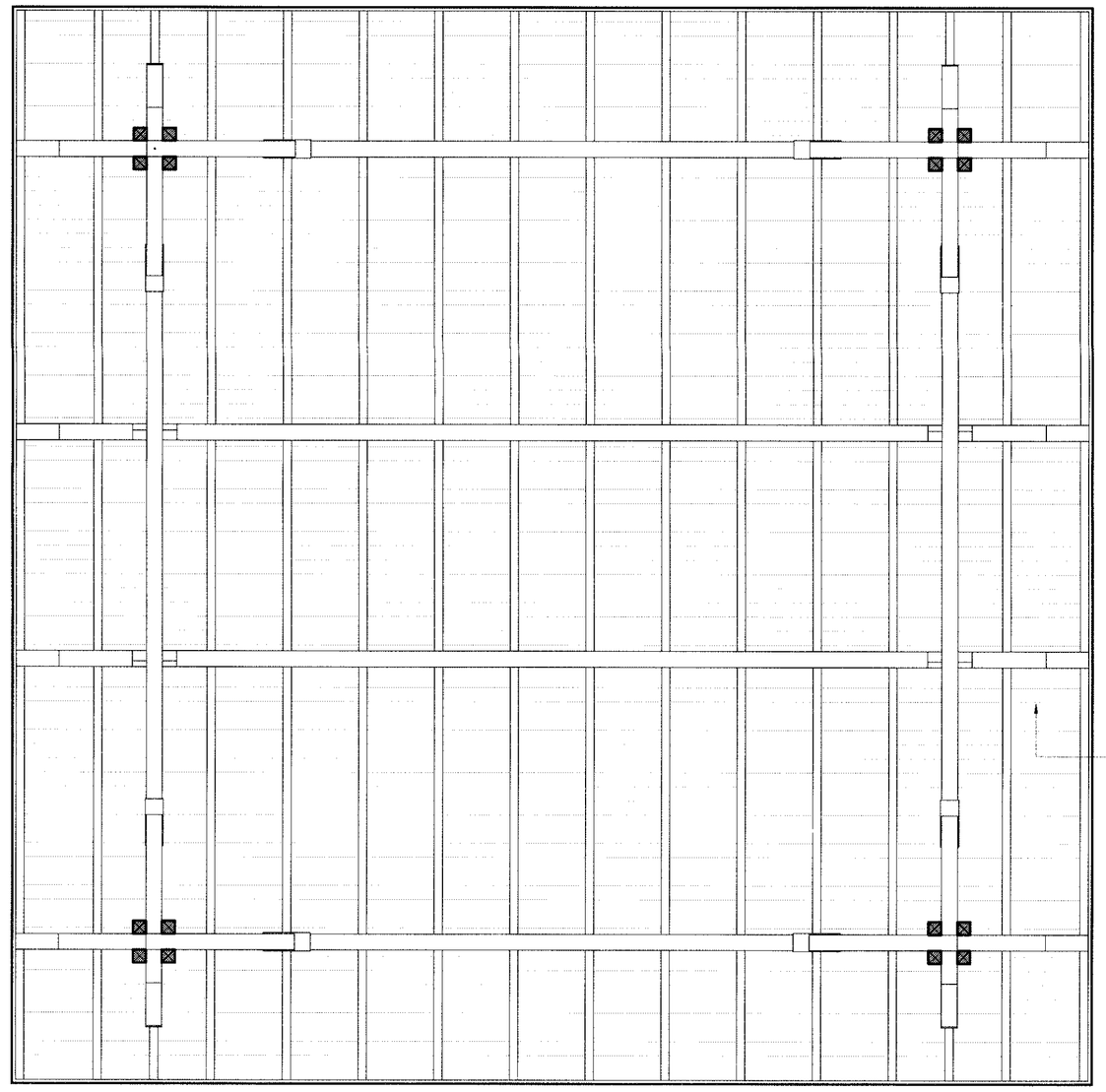

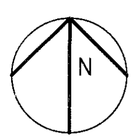

2 **Reflected Ceiling Plan: Restrooms & Storage**

scale: 1/4" = 1'-0"

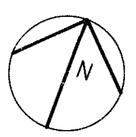

1 **Reflected Ceiling Plan: Committal Shelter**

scale: 1/4" = 1'-0"

1"

GRAPHIC SCALE MEASURES 1 INCH ON FULL-SIZE PLANS.

LACO ASSOCIATES

CONSULTING ENGINEERS

21 W 4TH ST. EUREKA, CA 95501 (707)443-5054

NO.	PROJECT HISTORY	BY	CHK	DATE
5	BID ADDENDUM 1	EAL	NKT	6/27/11
4	100% SUBMITTAL	EAL	MAH	5/24/11
3	PROGRESS SUBMITTAL NO. 1	EAL	MAH	5/18/11
2	75% SUBMITTAL	EAL	MAH	4/15/11
1	DD SUBMITTAL	EAL	MAH	04/07/11

YUROK VETERANS CEMETERY

RESTRM./STORAGE & COMMITTAL SHELTER REFLECTED CEILING PLANS

YUROK TRIBE

BALD HILLS RD., HUMBOLDT CO.

SCALE	AS SHOWN
DRAWN	EAL
CHECK	EAL
APPVD	NKT
DATE	05/24/2011
JOB NO.	7105.03
SHEET	**A2.4**

I:\Cadfiles\7100\7105 YUROK VETERANS CEMETERY\DWG\7105-03 ARCH A2.4 Reflected Ceiling Plan - RS&CS.dwg, 6/27/2011 2:15:52 AM, DWG To PDF.pc3

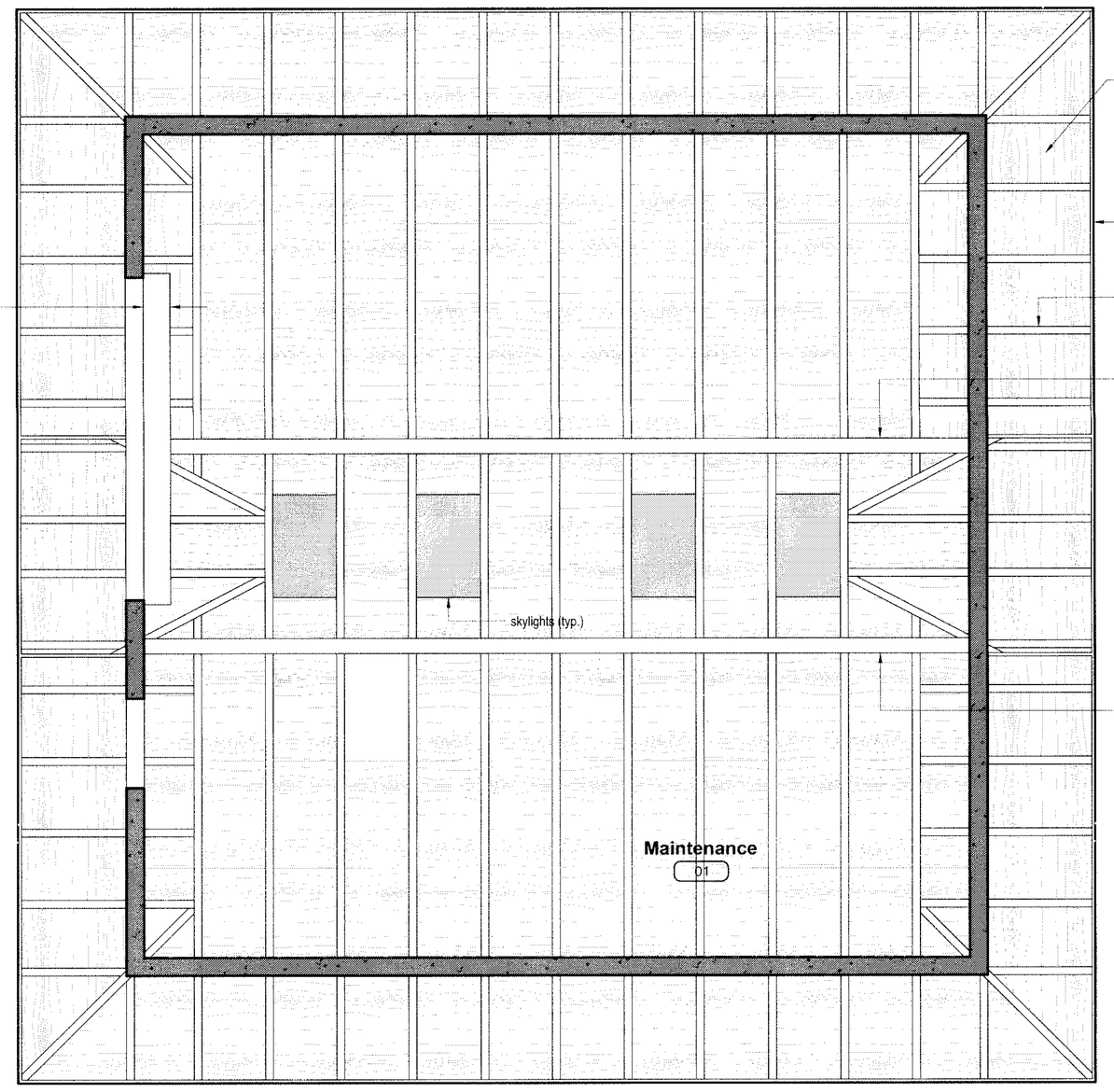

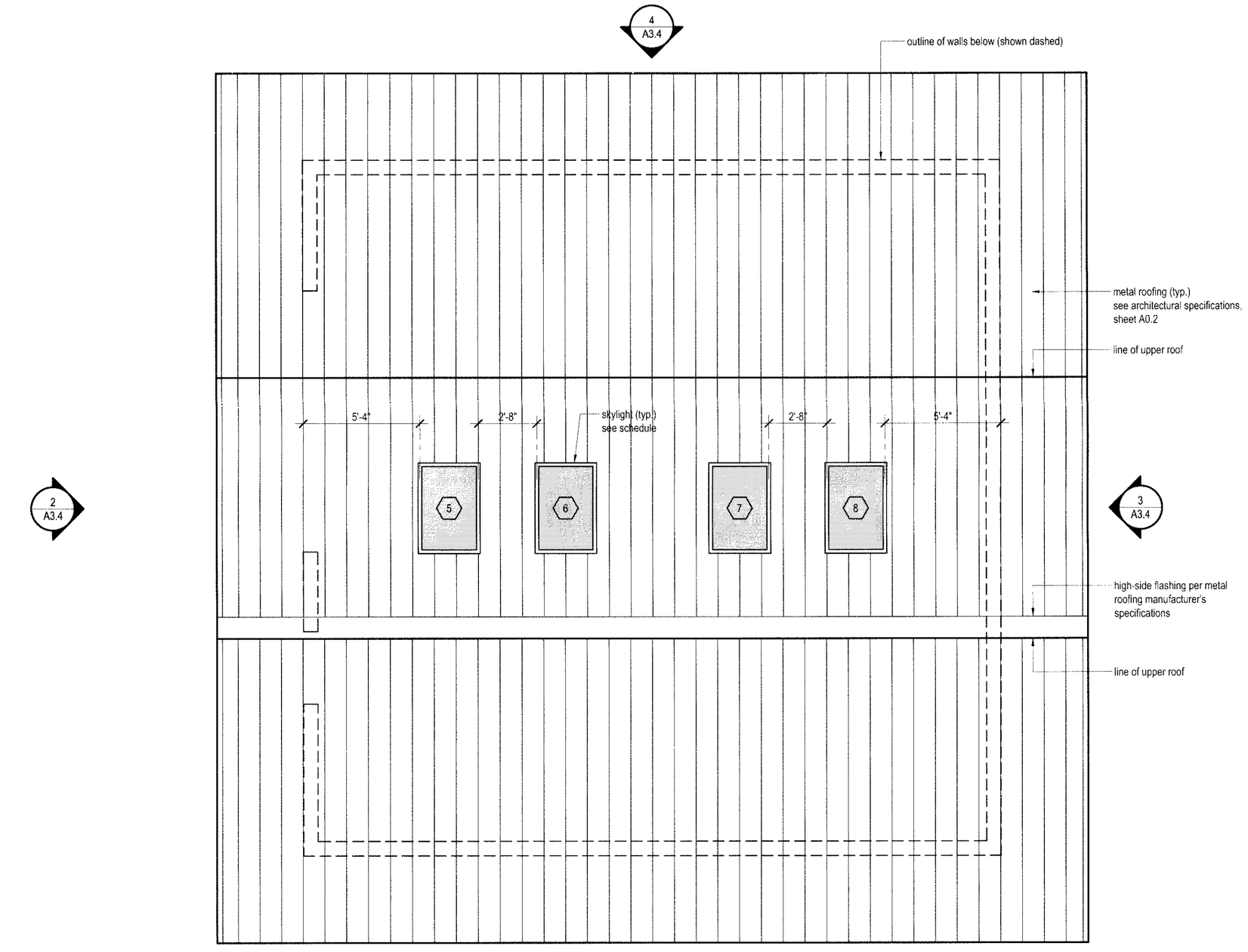

1
A3.4

N

2 Reflected Ceiling Plan: Maintenance Building

scale: 1/4" = 1'-0"

1
A3.4

N

1 Roof Plan: Maintenance Building

scale: 1/4" = 1'-0"

1"

GRAPHIC SCALE MEASURES 1 INCH ON FULL-SIZE PLANS.

LACO ASSOCIATES
CONSULTING ENGINEERS
21 W 4TH ST. EUREKA, CA 95501 (707)443-5054

NO.	PROJECT HISTORY	BY	CHK	DATE
5	BID ADDENDUM 1	EAL	NKT	6/27/11
4	100% SUBMITTAL	EAL	MAH	5/24/11
3	PROGRESS SUBMITTAL NO. 1	EAL	MAH	5/18/11
2	75% SUBMITTAL	EAL	MAH	4/15/11
1	DD SUBMITTAL	EAL	MAH	04/07/11

YUROK VETERANS CEMETERY
MAINTENANCE BUILDING
ROOF & REFLECTED CEILING PLANS

YUROK TRIBE
BALD HILLS RD., HUMBOLDT CO.

SCALE	AS SHOWN
DRAWN	EAL
CHECK	EAL
APPVD	NKT
DATE	05/24/2011
JOB NO.	7105.03
SHEET	**A2.5**

T:\Cadfiles\7100\7105 YUROK VETERANS CEMETERY\DWG\7105-03 ARCH A2.5 Roof & Reflected Ceiling Plan - MB.dwg, 6/27/2011 2:16:26 AM, DWG To PDF.pc3

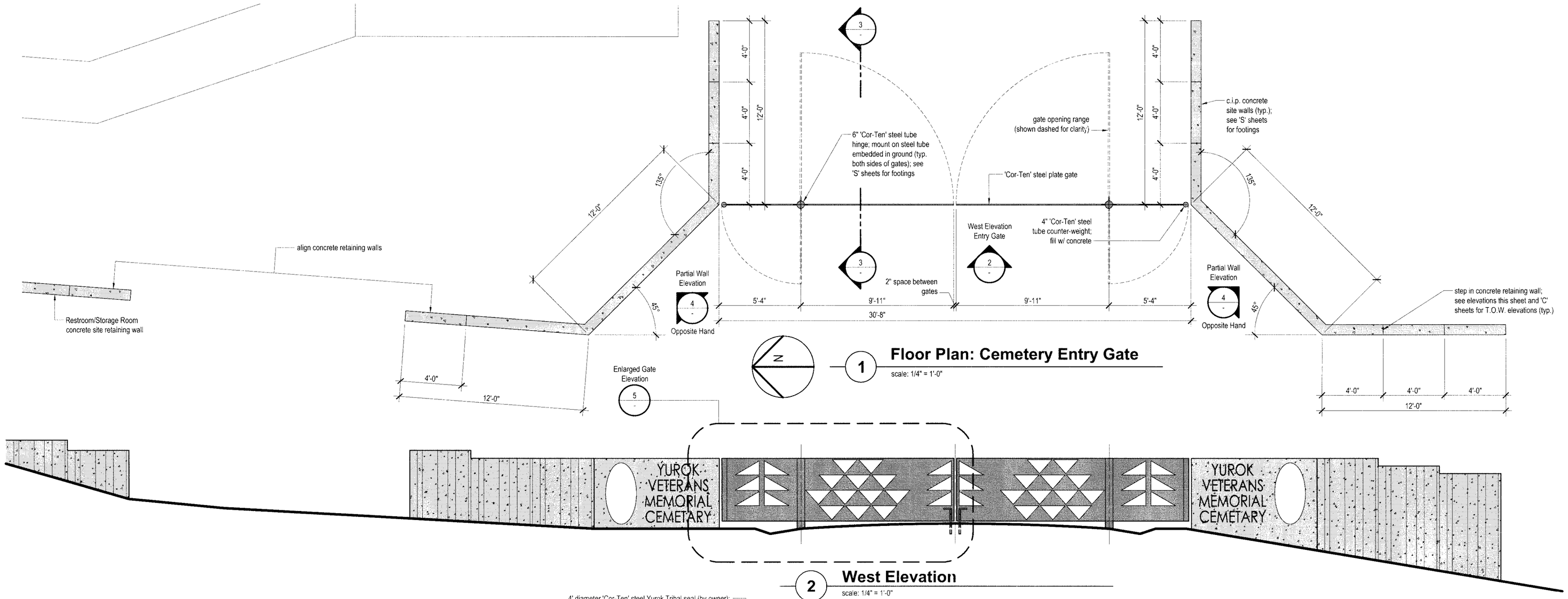

1 Floor Plan: Cemetery Entry Gate

scale: 1/4" = 1'-0"

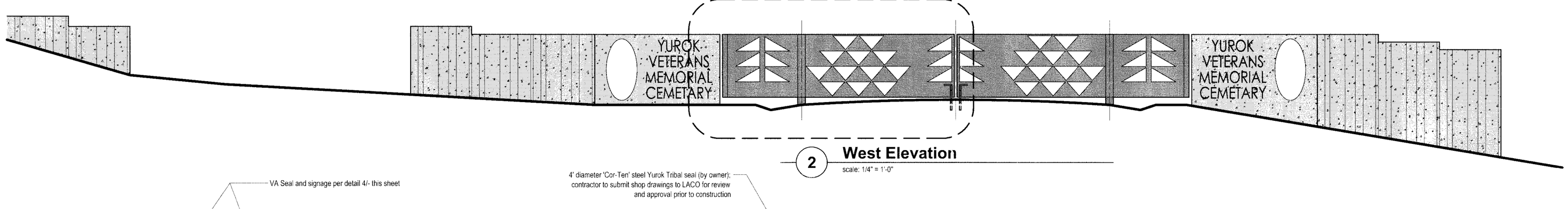

2 West Elevation

scale: 1/4" = 1'-0"

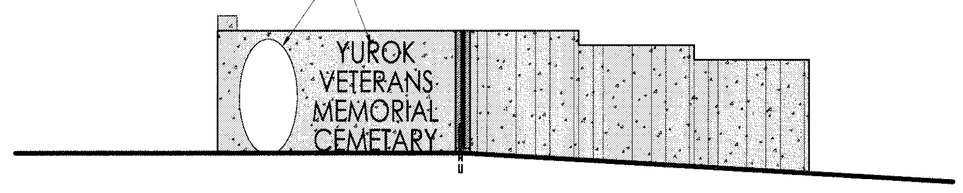

3 Partial Gate Elevation/Section

scale: 1/4" = 1'-0"

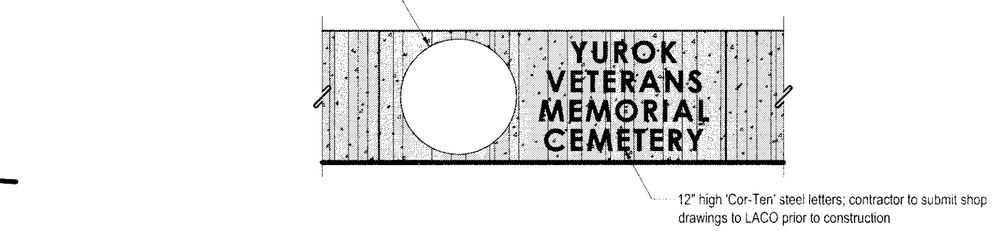

4 Partial Entry Wall Elevation

scale: 1/4" = 1'-0"

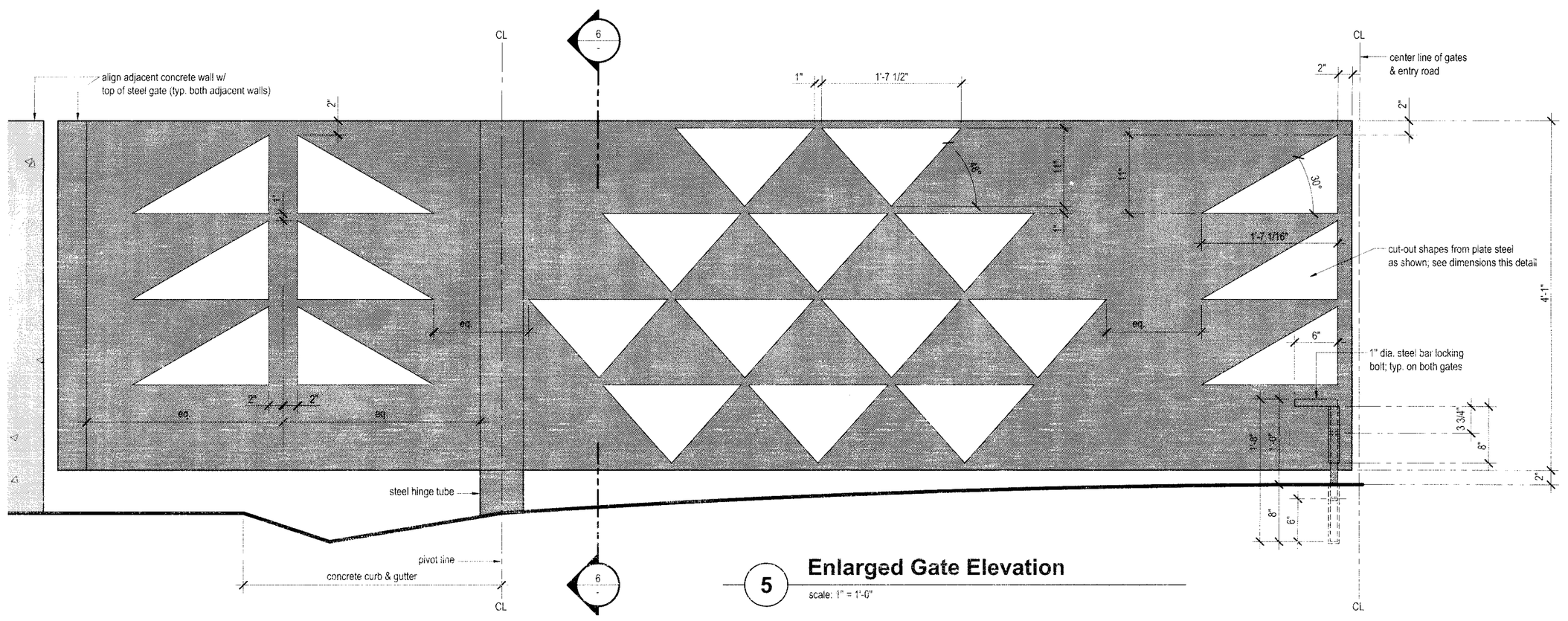

5 Enlarged Gate Elevation

scale: 1" = 1'-0"

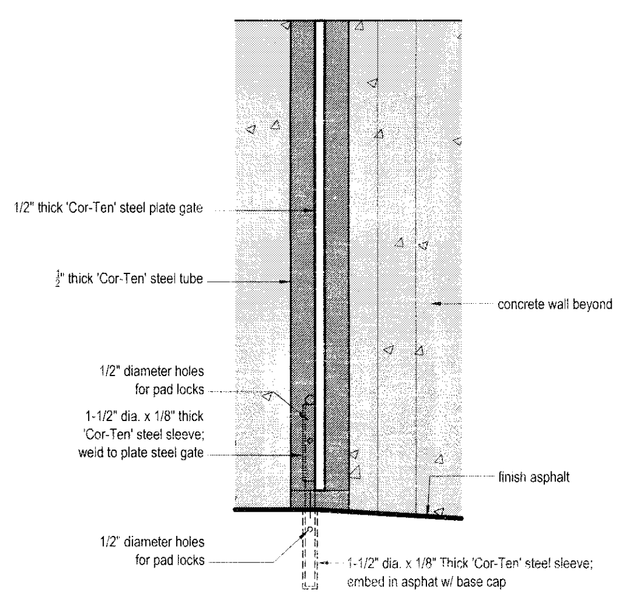

6 Section Through Gate

scale: 1" = 1'-0"

Legend

- cast-in-place concrete full-height walls
- cast-in-place concrete partial-height walls
- concrete site & building slabs & ramps

1"

GRAPHIC SCALE MEASURES 1 INCH ON FULL-SIZE PLANS.

LACO ASSOCIATES
CONSULTING ENGINEERS
21 W 4TH ST. EUREKA, CA 95501 (707)443-5054

NO.	PROJECT HISTORY	BY	CHK	DATE
5	BID ADDENDUM 1	EAL	NKT	6/27/11
4	100% SUBMITTAL	EAL	MAH	5/24/11
3	PROGRESS SUBMITTAL NO. 1	EAL	MAH	5/18/11
2	75% SUBMITTAL	EAL	MAH	4/15/11
1	DD SUBMITTAL	EAL	MAH	04/07/11

YUROK VETERANS CEMETERY
CEMETERY ENTRY GATE & WALLS
PLAN, ELEVATIONS & SECTION

YUROK TRIBE
BALD HILLS RD., HUMBOLDT CO.

SCALE	AS SHOWN
DRAWN	EAL
CHECK	EAL
APPVD	NKT
DATE	05/24/2011
JOB NO.	7105.03
SHEET	**A2.6**

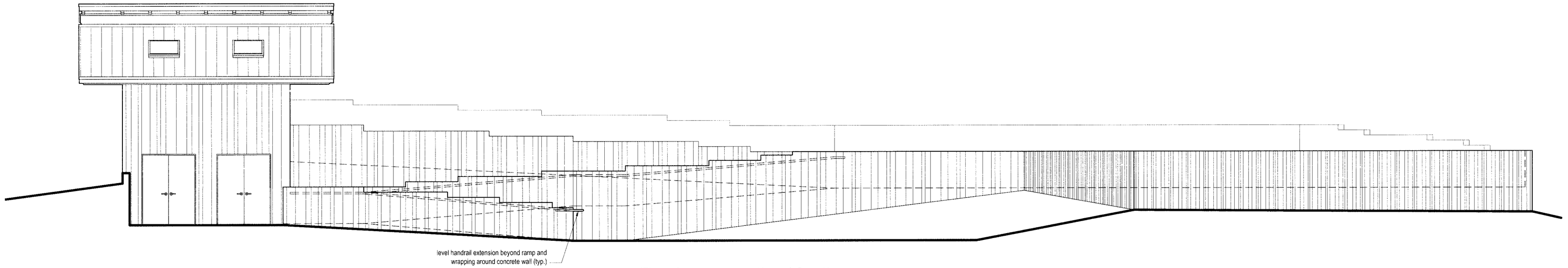

1 **South Elevation / Section**
scale: 3/16" = 1'-0"

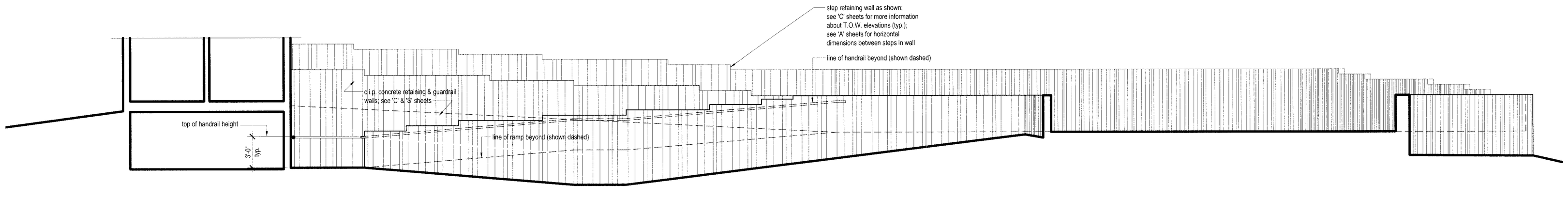

2 **South Elevation / Section**
scale: 3/16" = 1'-0"

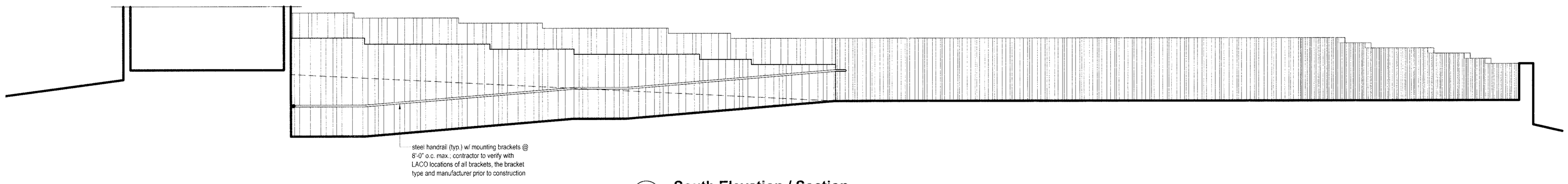

3 **South Elevation / Section**
scale: 3/16" = 1'-0"

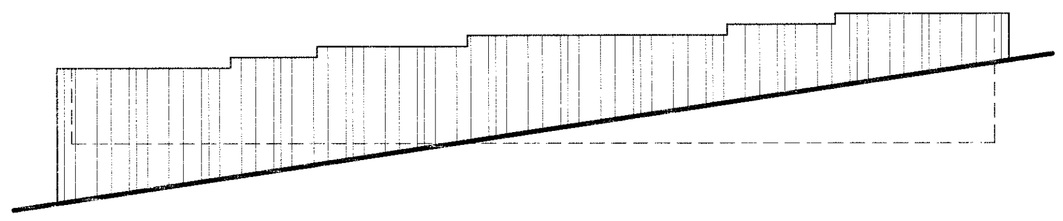

4 **Northeast Elevation - Retaining Wall**
scale: 3/16" = 1'-0"

1"

GRAPHIC SCALE MEASURES 1 INCH ON FULL-SIZE PLANS.

REGISTERED PROFESSIONAL ENGINEER
NATHAN KOHLER TOEWS
No. 70251
Exp. 9/30/12
1-27-11
CIVIL
STATE OF CALIFORNIA

LACO ASSOCIATES
CONSULTING ENGINEERS
21 W 4TH ST. EUREKA, CA 95501 (707)443-5054

NO.	PROJECT HISTORY	BY	CHK	DATE
5	BID ADDENDUM 1	EAL	NKT	6/27/11
4	100% SUBMITTAL	EAL	MAH	5/24/11
3	PROGRESS SUBMITTAL NO. 1	EAL	MAH	5/18/11
2	75% SUBMITTAL	EAL	MAH	4/15/11
1	DD SUBMITTAL	EAL	MAH	04/07/11

YUROK VETERANS CEMETERY
SITE ELEMENTS
EXTERIOR ELEVATIONS - SITE WORK

YUROK TRIBE
BALD HILLS RD., HUMBOLDT CO.

SCALE	AS SHOWN
DRAWN	EAL
CHECK	EAL
APPVD	NKT
DATE	05/24/2011
JOB NO.	7105.03
SHEET	**A3.1**

T:\Cadfiles\7100\7105 YUROK VETERANS CEMETERY\DWG\7105-03 ARCH A3.1 Exterior Elevations Site Work.dwg, 6/27/2011 2:19:56 AM, DWG To PDF.pc3

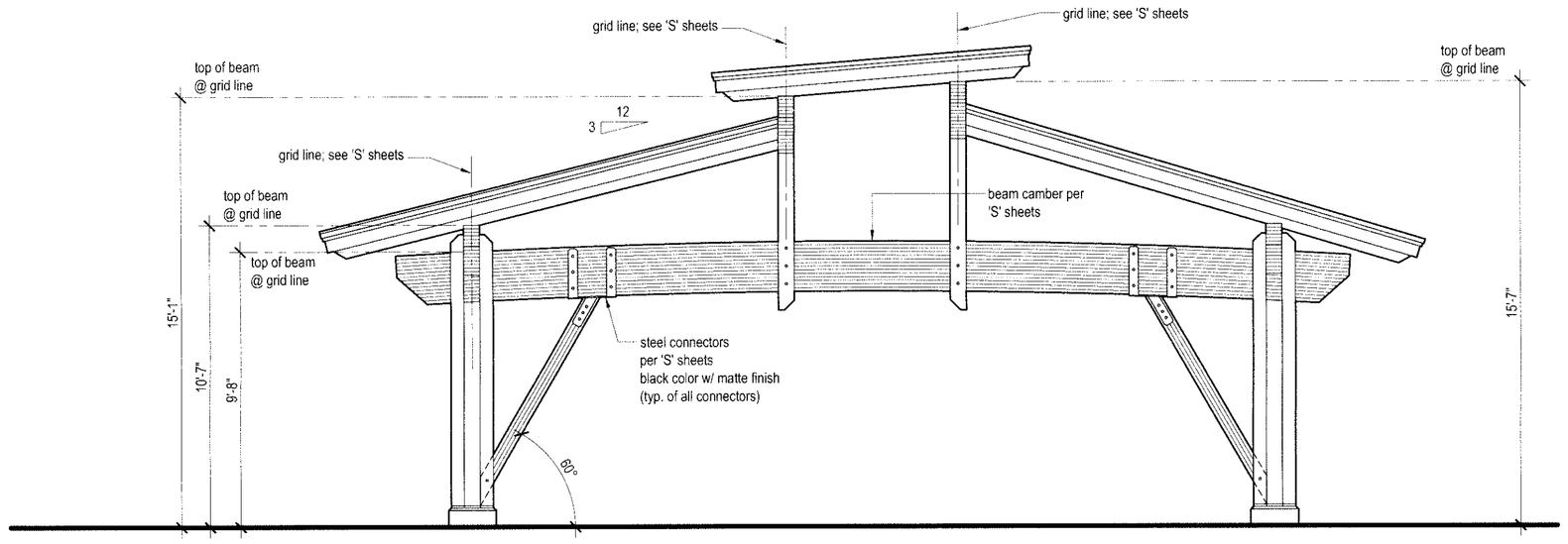

2 **West Elevation**
scale: 1/4" = 1'-0"

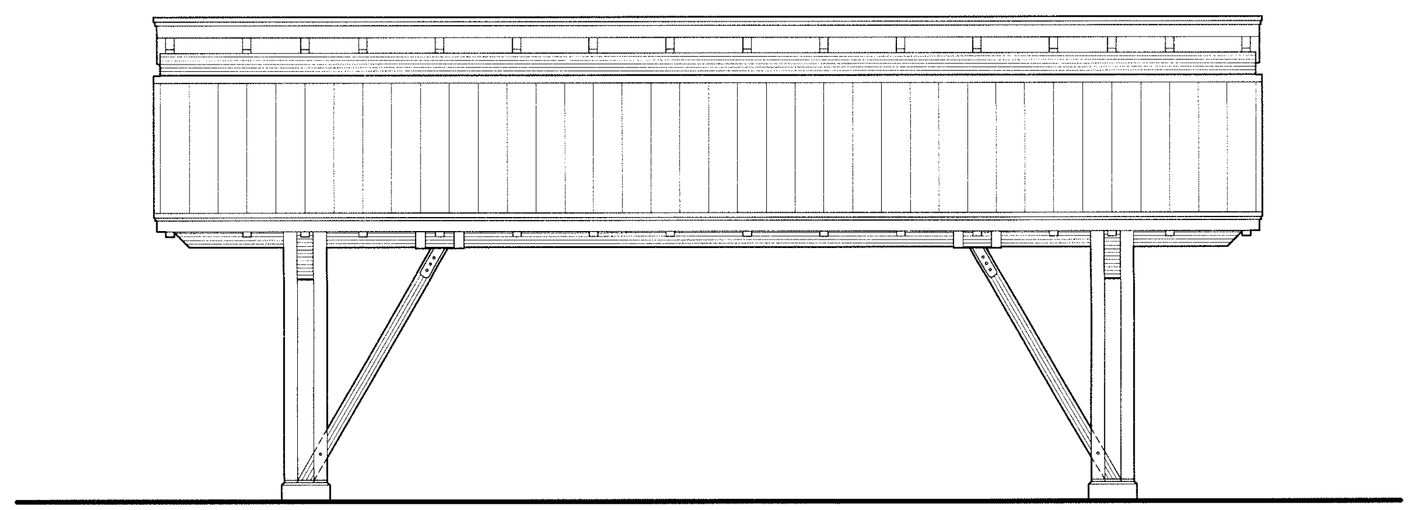

1 **South Elevation**
scale: 1/4" = 1'-0"

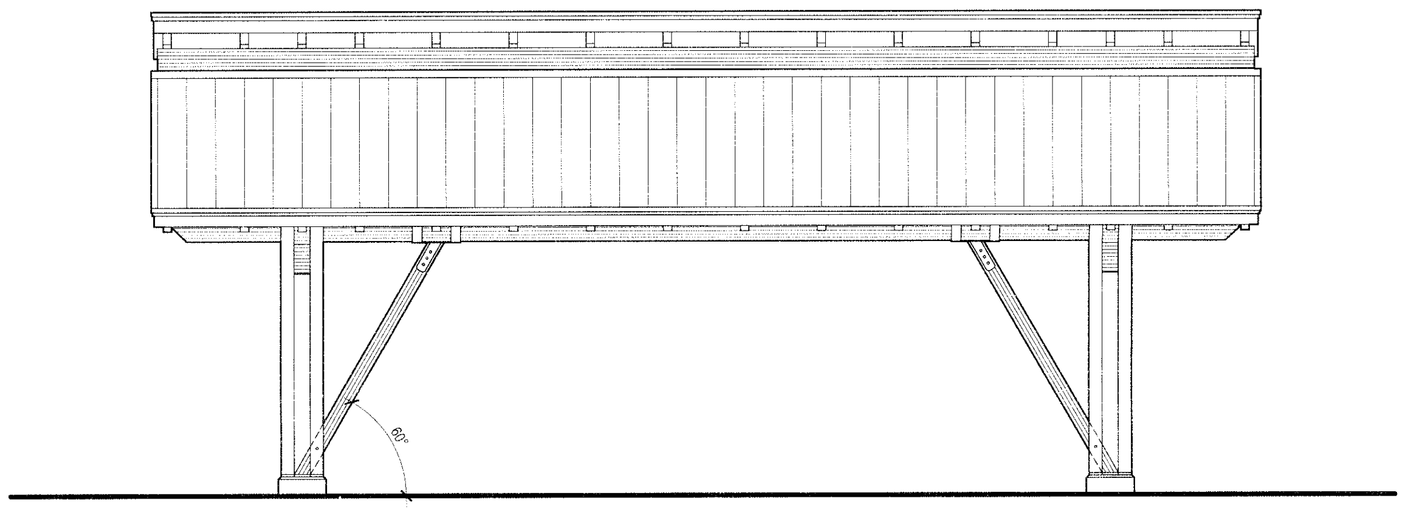

4 **North Elevation**
scale: 1/4" = 1'-0"

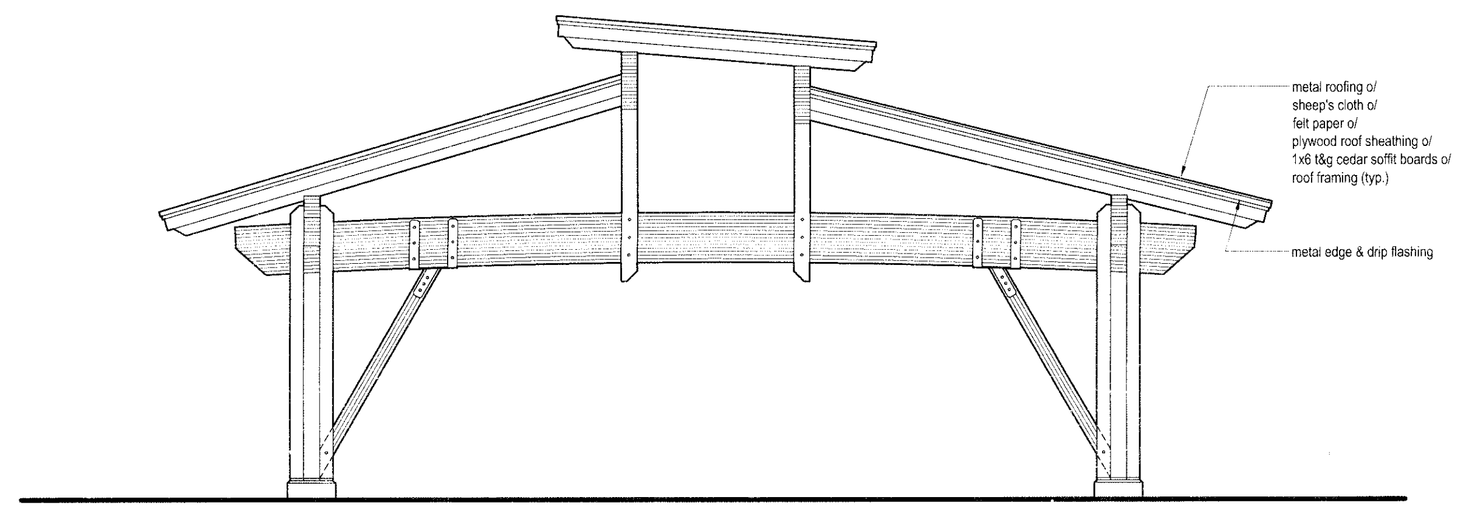

3 **East Elevation**
scale: 1/4" = 1'-0"

1"

GRAPHIC SCALE MEASURES 1 INCH ON FULL-SIZE PLANS.

REGISTERED PROFESSIONAL ENGINEER
NATHAN KOHLER TORWAY
No. 70251
Exp. 9/30/12
CIVIL
STATE OF CALIFORNIA

LACO ASSOCIATES
CONSULTING ENGINEERS
21 W 4TH ST. EUREKA, CA 95501 (707)443-5054

NO.	PROJECT HISTORY	BY	CHK	DATE
5	BID ADDENDUM 1	EAL	NKT	6/27/11
4	100% SUBMITTAL	EAL	MAH	5/24/11
3	PROGRESS SUBMITTAL NO. 1	EAL	MAH	5/18/11
2	75% SUBMITTAL	EAL	MAH	4/15/11
1	DD SUBMITTAL	EAL	MAH	04/07/11

YUROK VETERANS CEMETERY
COMMITTAL SHELTER
EXTERIOR ELEVATIONS

YUROK TRIBE
BALD HILLS RD., HUMBOLDT CO.

SCALE	AS SHOWN
DRAWN	EAL
CHECK	EAL
APPVD	NKT
DATE	05/24/2011
JOB NO.	7105.03
SHEET	**A3.2**

T:\Cadfiles\7100\7105 YUROK VETERANS CEMETERY\DWG\7105-03 APCH A3.2 Exterior Elevations Committal Shelter.dwg, 6/27/2011 2:20:29 AM, DWG To PDF.pc3

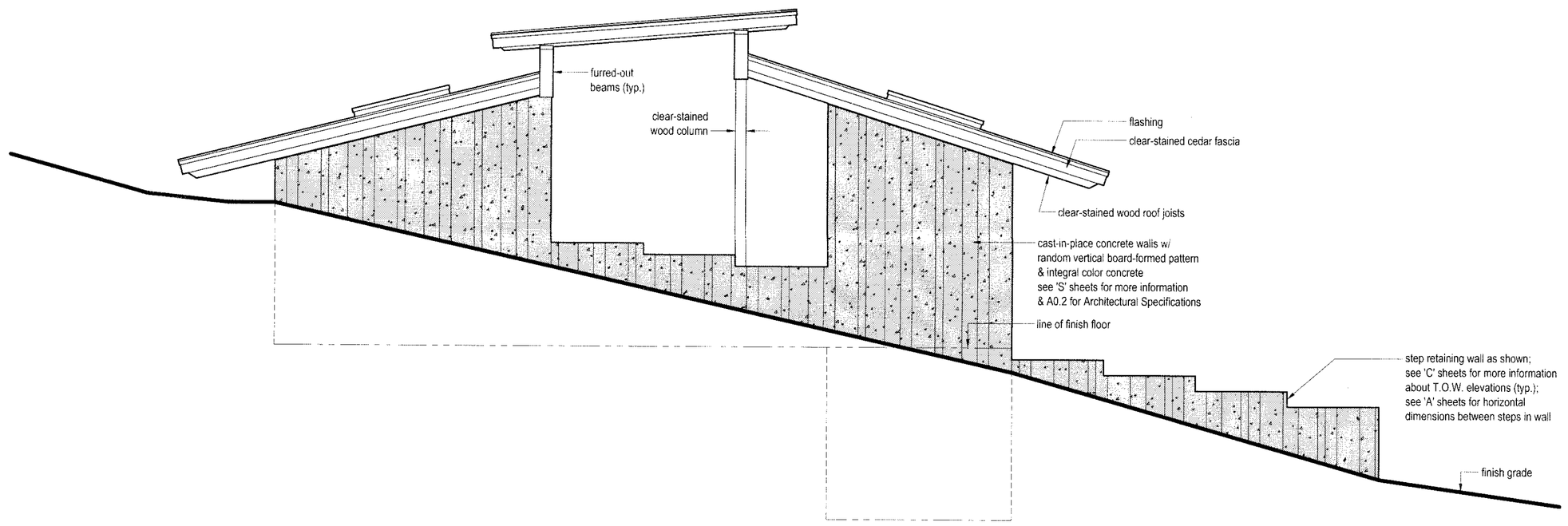

2 **West Elevation**
scale: 1/4" = 1'-0"

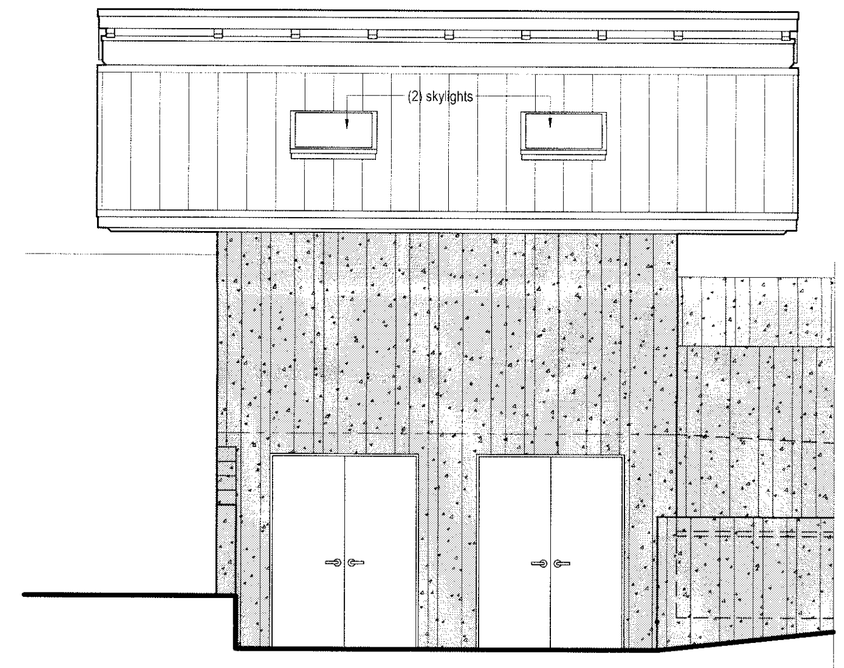

1 **South Elevation**
scale: 1/4" = 1'-0"

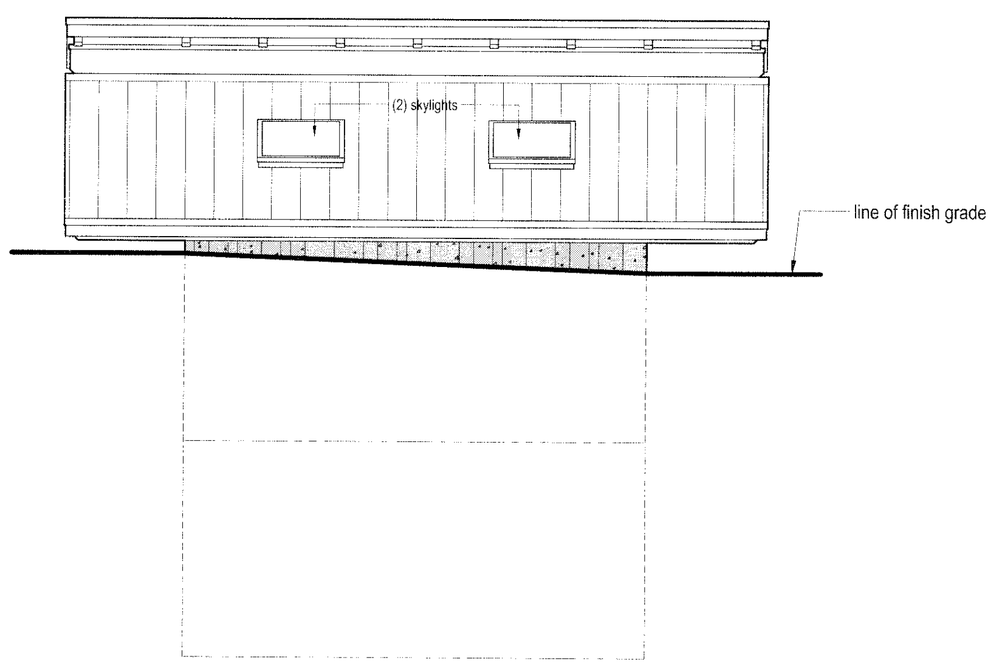

4 **North Elevation**
scale: 1/4" = 1'-0"

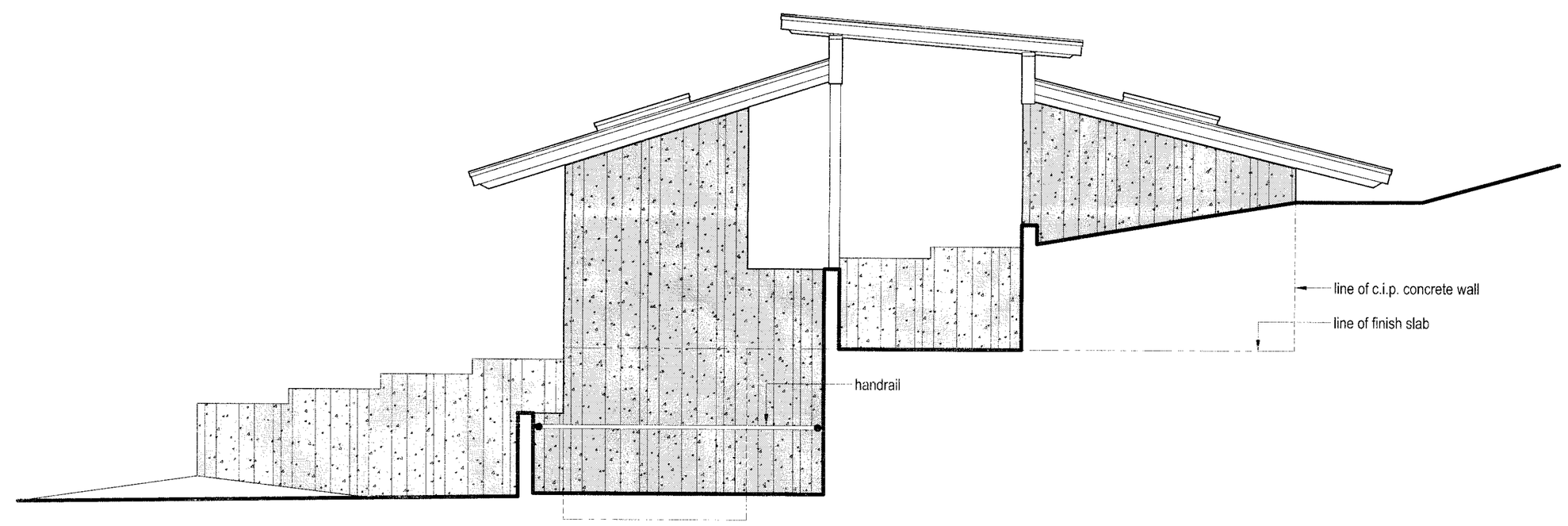

3 **East Elevation**
scale: 1/4" = 1'-0"

1"

GRAPHIC SCALE MEASURES 1 INCH ON FULL-SIZE PLANS.

REGISTERED PROFESSIONAL ENGINEER
NATHAN KOHLER TOBIAS
No. 70251
Exp. 9/30/12
6-27-11
CIVIL
STATE OF CALIFORNIA

LACO ASSOCIATES
CONSULTING ENGINEERS
21 W 4TH ST. EUREKA, CA 95501 (707)443-5054

NO.	PROJECT HISTORY	BY	CHK	DATE
5	BID ADDENDUM 1	EAL	NKT	6/27/11
4	100% SUBMITTAL	EAL	MAH	5/24/11
3	PROGRESS SUBMITTAL NO. 1	EAL	MAH	5/18/11
2	75% SUBMITTAL	EAL	MAH	4/15/11
1	DD SUBMITTAL	EAL	MAH	04/07/11

YUROK VETERANS CEMETERY
RESTROOM & STORAGE BUILDING
EXTERIOR ELEVATIONS

YUROK TRIBE
BALD HILLS RD., HUMBOLDT CO.

SCALE	AS SHOWN
DRAWN	EAL
CHECK	EAL
APPVD	NKT
DATE	05/24/2011
JOB NO.	7105.03
SHEET	**A3.3**

T:\Cadfiles\7100\7105 YUROK VETERANS CEMETERY\DWG\7105-03 ARCH A3.3 Exterior Elevations Restroom & Storage.dwg, 6/27/2011 2:20:56 AM, DWG To PDF.pc3

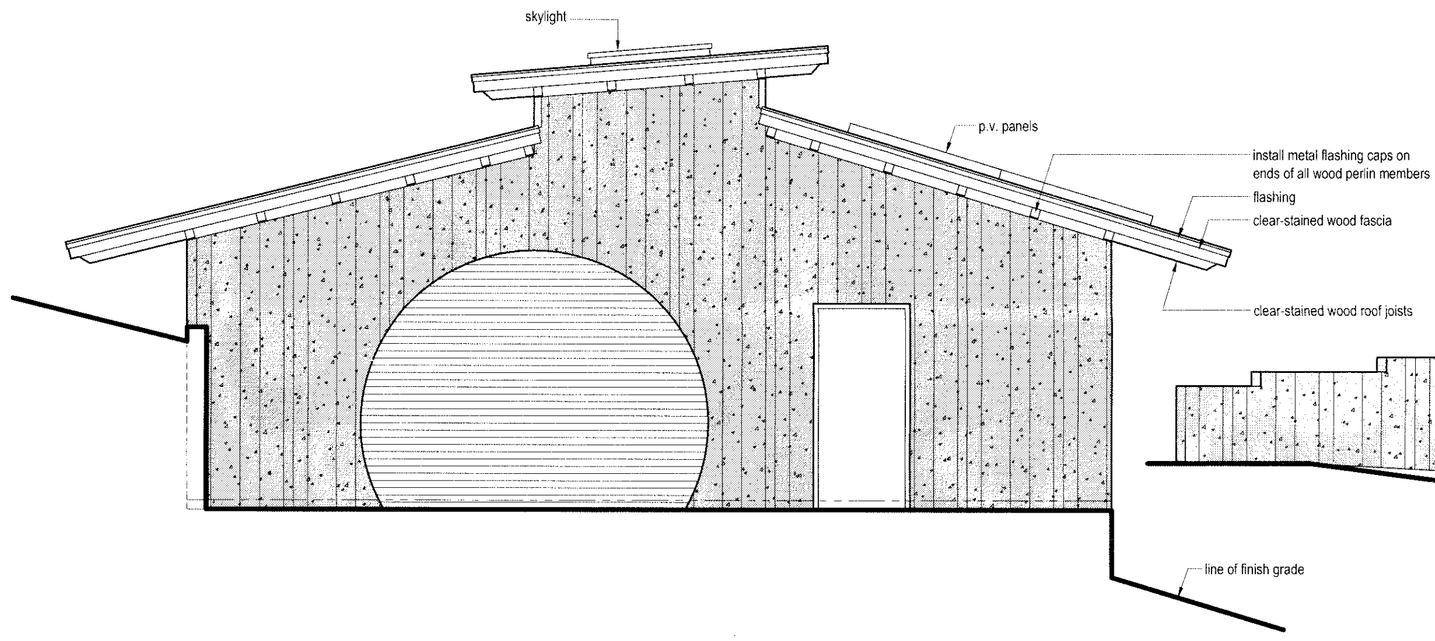

2 West Elevation
scale: 1/4" = 1'-0"

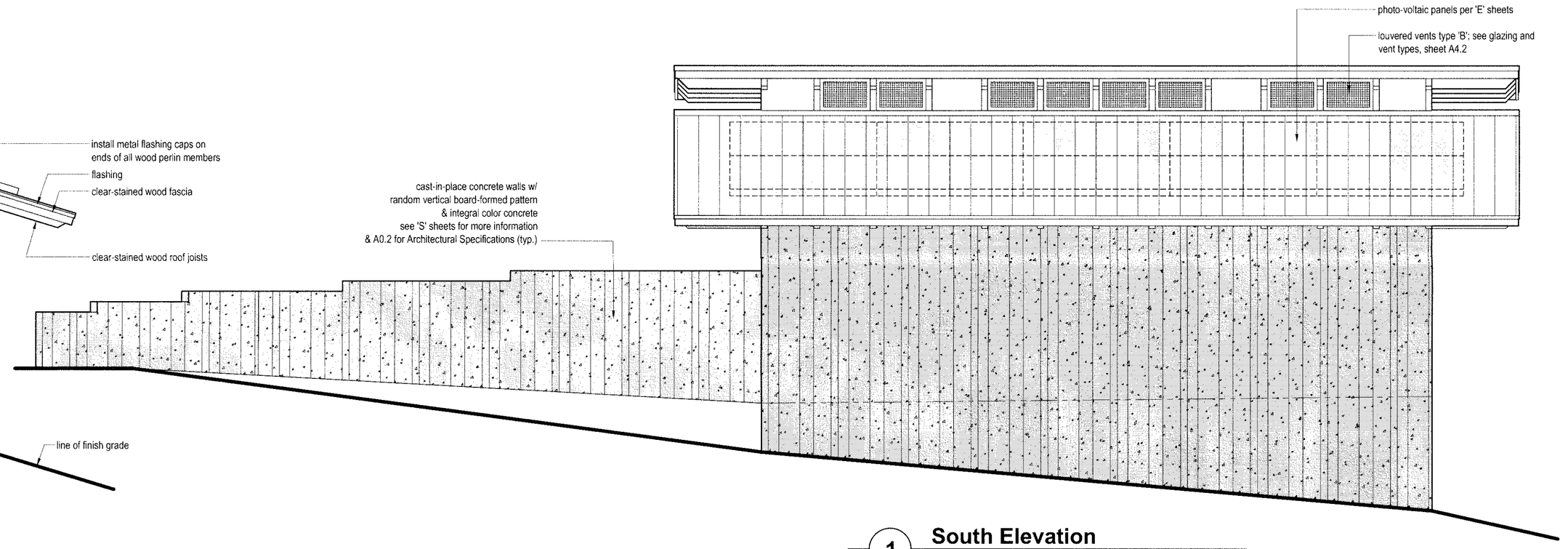

1 South Elevation
scale: 1/4" = 1'-0"

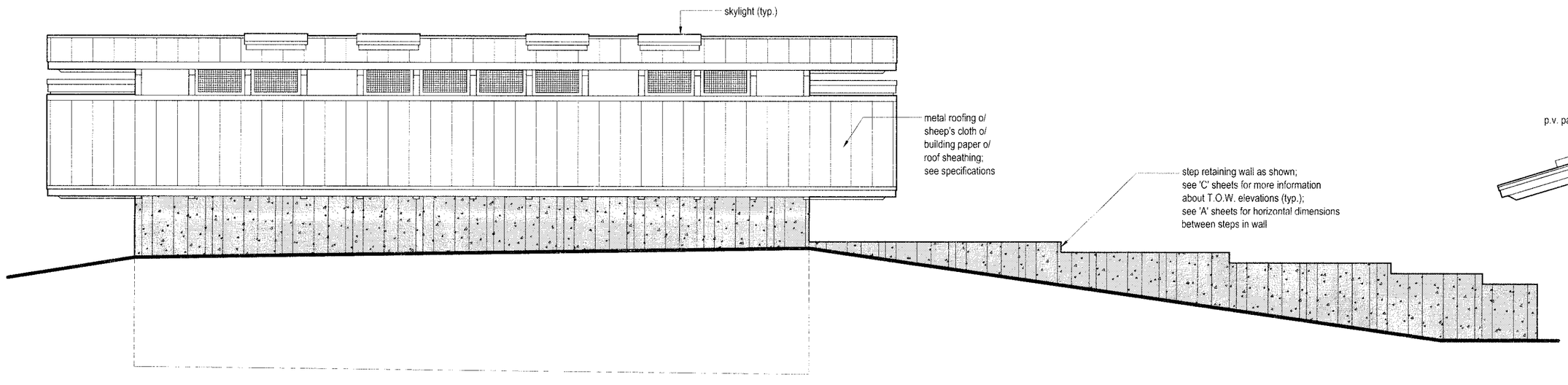

4 North Elevation
scale: 1/4" = 1'-0"

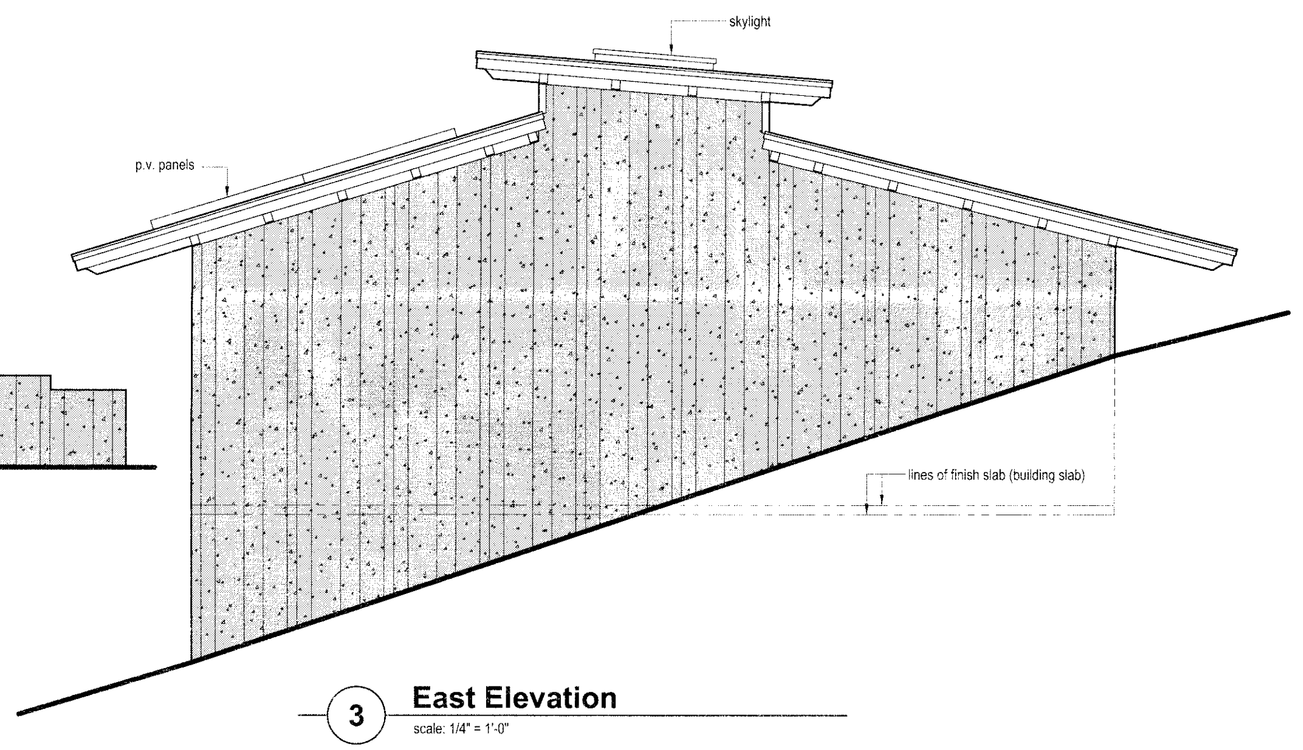

3 East Elevation
scale: 1/4" = 1'-0"

1"

GRAPHIC SCALE MEASURES 1 INCH ON FULL-SIZE PLANS.

LACO ASSOCIATES
CONSULTING ENGINEERS
21 W 4TH ST. EUREKA, CA 95501 (707)443-5054

REGISTERED PROFESSIONAL ENGINEER No. 70251 Exp. 9/30/12 CIVIL STATE OF CALIFORNIA
6-27-11

NO.	PROJECT HISTORY	BY	CHK	DATE
5	BID ADDENDUM 1	EAL	NKT	6/27/11
4	100% SUBMITTAL	EAL	MAH	5/24/11
3	PROGRESS SUBMITTAL NO. 1	EAL	MAH	5/18/11
2	75% SUBMITTAL	EAL	MAH	4/15/11
1	DD SUBMITTAL	EAL	MAH	04/07/11

YUROK VETERANS CEMETERY
MAINTENANCE BUILDING
EXTERIOR ELEVATIONS

YUROK TRIBE
BALD HILLS RD., HUMBOLDT CO.

SCALE	AS SHOWN
DRAWN	EAL
CHECK	EAL
APPVD	NKT
DATE	05/24/2011
JOB NO.	7105.03
SHEET	**A3.4**

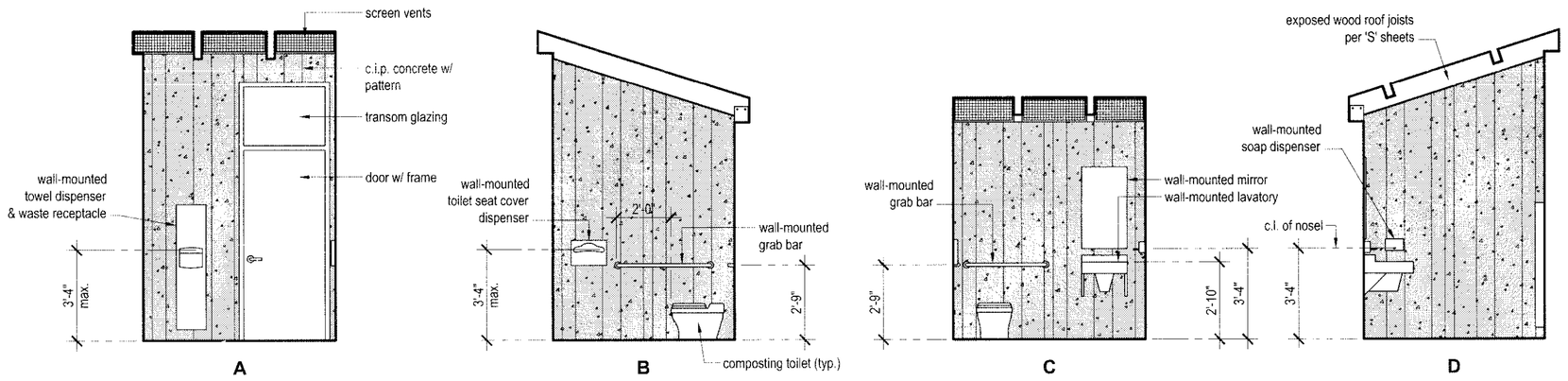

1 Toilet Room

scale: 1/4" = 1'-0"

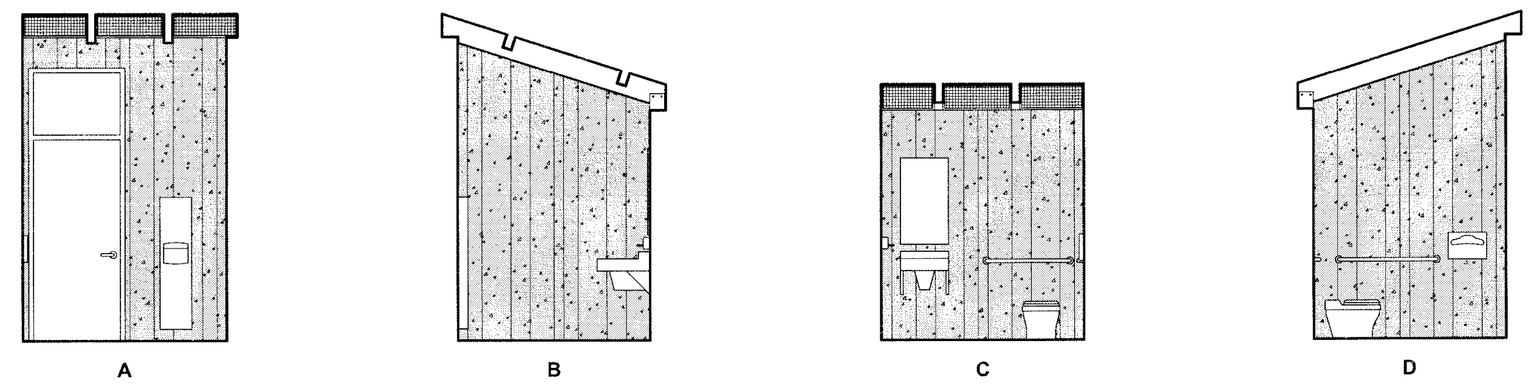

2 Toilet Room

scale: 1/4" = 1'-0"

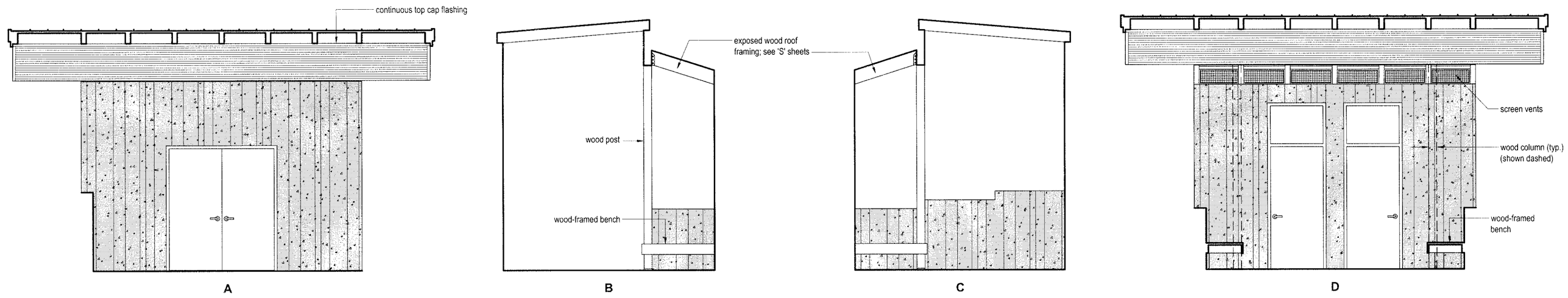

3 Vestibule

scale: 1/4" = 1'-0"

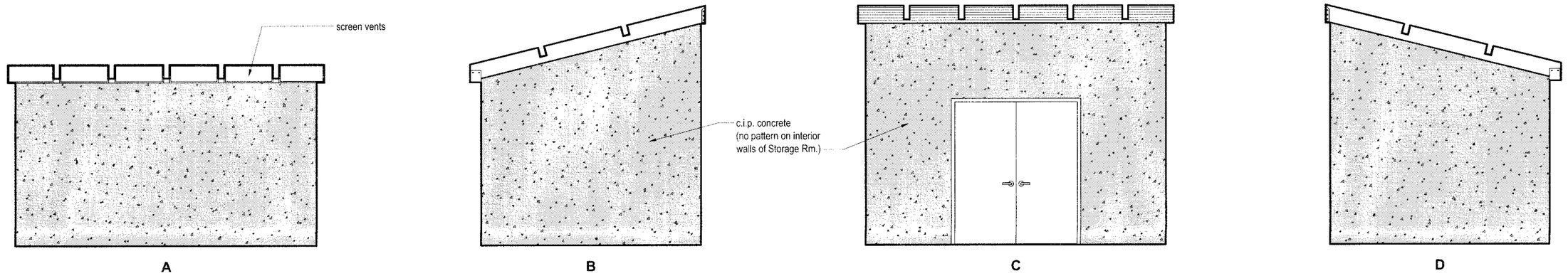

4 Storage

scale: 1/4" = 1'-0"

1"

GRAPHIC SCALE MEASURES 1 INCH ON FULL-SIZE PLANS.

LACO ASSOCIATES
CONSULTING ENGINEERS
21 W 4TH ST. EUREKA, CA 95501 (707)443-5054

NO.	PROJECT HISTORY	BY	CHK	DATE
5	BID ADDENDUM 1	EAL	NKT	6/27/11
4	100% SUBMITTAL	EAL	MAH	5/24/11
3	PROGRESS SUBMITTAL NO. 1	EAL	MAH	5/18/11
2	75% SUBMITTAL	EAL	MAH	4/15/11
1	DD SUBMITTAL	EAL	MAH	04/07/11

YUROK VETERANS CEMETERY
INTERIOR ELEVATIONS

YUROK TRIBE
BALD HILLS RD., HUMBOLDT CO.

SCALE	AS SHOWN
DRAWN	EAL
CHECK	EAL
APPVD	NKT
DATE	05/24/2011
JOB NO.	7105.03
SHEET	A4.1

T:\Cadfiles\7100\7105 YUROK VETERANS CEMETERY\DWG\7105-03 ARCH A4.1 Interior Elevations.dwg, 6/27/2011 2:21:50 AM, DWG To PDF.pc3

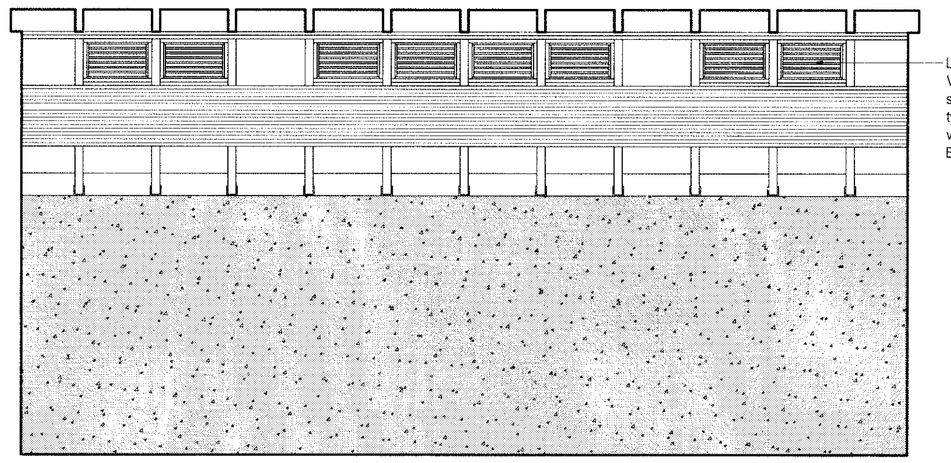

A

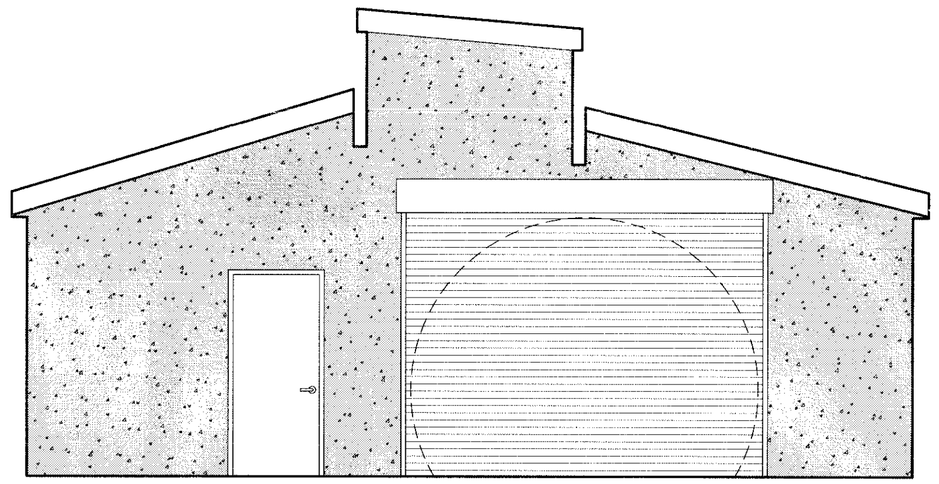

B

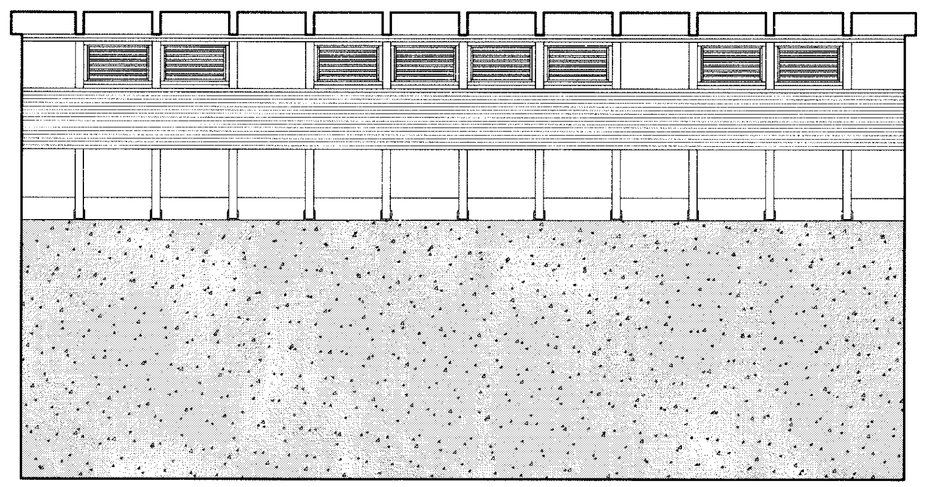

C

5 Maintenance Building

scale: 1/4" = 1'-0"

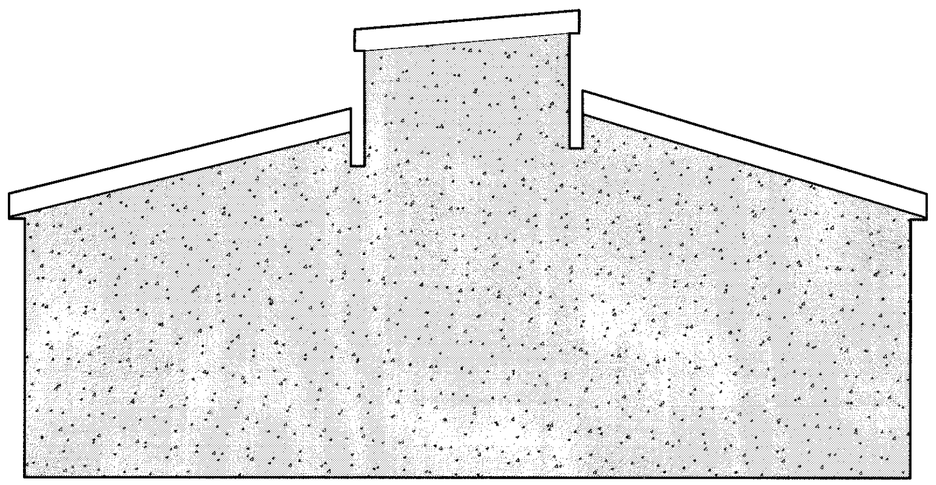

D

5 Maintenance Building (continued)

scale: 1/4" = 1'-0"

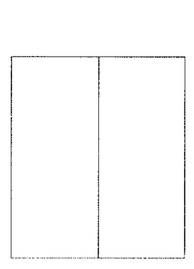

A

'Steelcraft'
Flush Steel Double Doors
B - Series
Welded & Finished Seams

B

'Steelcraft'
Flush Steel Door
B - Series
Welded & Finished Seams

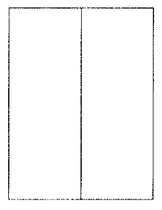

C

'Steelcraft'
Flush Steel Double Doors
B - Series
Welded & Finished Seams

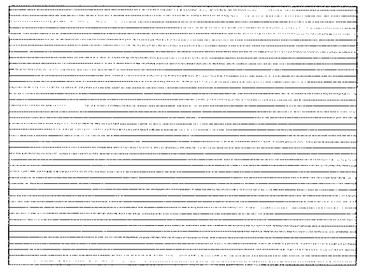

D

'Best Roll-Up Door, Inc.'
Steel Roll-Up Door
B - Series
Welded & Finished Seams

Door Types

scale: 1/4" = 1'-0"

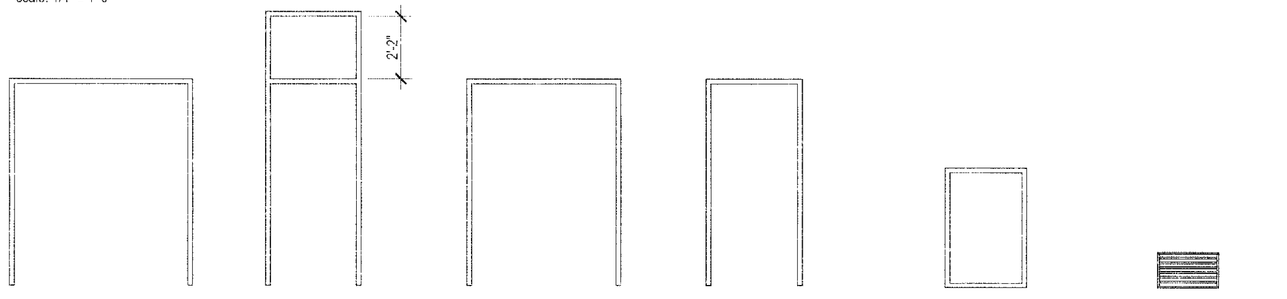

A

'Steelcraft'
MU Series
Flush 3-Sided Frames
Welded & Finished Seams

B

'Steelcraft'
MU Series
Flush 3-Sided Frames
Welded & Finished Seams

C

'Steelcraft'
MU Series
Flush 3-Sided Frames
Welded & Finished Seams

B

'Steelcraft'
MU Series
Flush 3-Sided Frames
Welded & Finished Seams

Door Frame Types

scale: 1/4" = 1'-0"

A

Skylight

B

'Architectural Louvers'
E2JS 2" Deep 45 Degree
Standard J Blade w/ Flange

Glazing & Vent Types

scale: 1/4" = 1'-0"

Finish Schedule

ROOM		FLOOR		BASE & TRIM		WALLS		CEILING		REMARKS
NO.	NAME	MATERIAL	FINISH	MATERIAL	FINISH	MATERIAL	FINISH	MATERIAL	FINISH	
01	Committal Shelter	Concrete	Troweled	-	-	-	-	Cedar 1x6 T&G	Clear Stain	Concrete Slab to have integral color admixture
02	Storage	Concrete	Troweled	-	-	Concrete	Non Board-Form	Cedar 1x6 T&G	Clear Stain	Concrete Slab to have integral color admixture
03	Vestibule	Concrete	Troweled	-	-	Concrete	Board-Form	Cedar 1x6 T&G	Clear Stain	Concrete Slab to have integral color admixture; Board-form to follow patterns per A8.1
04	Toilet Room	Concrete	Troweled	-	-	Concrete	Board-Form	Cedar 1x6 T&G	Clear Stain	Concrete Slab to have integral color admixture; Board-form to follow patterns per A8.1
05	Toilet Room	Concrete	Troweled	-	-	Concrete	Board-Form	Cedar 1x6 T&G	Clear Stain	Concrete Slab to have integral color admixture; Board-form to follow patterns per A8.1
06	Mechanical Room	Concrete	Troweled	-	-	Concrete	Non Board-Form	Concrete	Sealer	Concrete Slab, walls and ceiling to receive concrete sealer
07	Mechanical Room	Concrete	Troweled	-	-	Concrete	Non Board-Form	Concrete	Sealer	Concrete Slab, walls and ceiling to receive concrete sealer
08	Maintenance Bldg.	Concrete	Troweled	-	-	Concrete	Non Board-Form	A/C Plywood	Clear Stain	Concrete Slab to have integral color admixture

Door Schedule

Door								Hdwr. Group	FRAME DETAILS						GLASS		FIRE RATING	REMARKS
NO.	TYPE	(N)/(E)	WIDTH	HEIGHT	THICK	MAT'L	FINISH		TYPE	MAT'L	FINISH	HEAD	JAMB	SILL	TYPE	THICK		
01	A	-	6'-0"	7'-0"	1-3/4"	STEEL	PAINT	-	A	STEEL	PAINT	-	-	-	-	-	-	Double doors
02	B	-	3'-0"	7'-0"	1-3/4"	STEEL	PAINT	-	B	STEEL	PAINT	-	-	-	-	-	-	Transom above w/ laminated glass
03	B	-	3'-0"	7'-0"	1-3/4"	STEEL	PAINT	-	B	STEEL	PAINT	-	-	-	-	-	-	Transom above w/ laminated glass
04	C	-	5'-0"	7'-0"	1-3/4"	STEEL	PAINT	-	C	STEEL	PAINT	-	-	-	-	-	-	Double doors
05	C	-	5'-0"	7'-0"	1-3/4"	STEEL	PAINT	-	C	STEEL	PAINT	-	-	-	-	-	-	Double doors
06	B	-	3'-0"	7'-0"	1-3/4"	STEEL	PAINT	-	B	STEEL	PAINT	-	-	-	-	-	-	
07	D	-	12'-0"	9'-0"	-	STEEL	PAINT	-	-	-	-	-	-	-	-	-	-	Roll-up door to have factory applied paint finish

Glazing Schedule

GLAZING UNIT			UNIT SIZE		FRAME		GLAZING TYPE	DETAILS			T.O. SILL HEIGHT	REMARKS
NO.	TYPE	(N)/(E)	W	H	MATERIAL	FINISH		HEAD	JAMB	SILL		
01	A	-	2'-8"	4'	Aluminum	Bronze	Tempered	-	-	-	-	'Milgard' 750 Skylight Model; No Low-E coating or Argon Gas; Use clear glass
02	A	-	2'-8"	4'	Aluminum	Bronze	Tempered	-	-	-	-	'Milgard' 750 Skylight Model; No Low-E coating or Argon Gas; Use clear glass
03	A	-	2'-8"	4'	Aluminum	Bronze	Tempered	-	-	-	-	'Milgard' 750 Skylight Model; No Low-E coating or Argon Gas; Use clear glass
04	A	-	2'-8"	4'	Aluminum	Bronze	Tempered	-	-	-	-	'Milgard' 750 Skylight Model; No Low-E coating or Argon Gas; Use clear glass
05	A	-	2'-8"	4'	Aluminum	Bronze	Tempered	-	-	-	-	'Milgard' 750 Skylight Model; No Low-E coating or Argon Gas; Use clear glass
06	A	-	2'-8"	4'	Aluminum	Bronze	Tempered	-	-	-	-	'Milgard' 750 Skylight Model; No Low-E coating or Argon Gas; Use clear glass
07	A	-	2'-8"	4'	Aluminum	Bronze	Tempered	-	-	-	-	'Milgard' 750 Skylight Model; No Low-E coating or Argon Gas; Use clear glass
08	A	-	2'-8"	4'	Aluminum	Bronze	Tempered	-	-	-	-	'Milgard' 750 Skylight Model; No Low-E coating or Argon Gas; Use clear glass

Plumbing Fixture, Accessories & Equipment Schedule

NO.	ITEM	MANUFACTURER	MODEL #	COLOR	REMARKS
01-P	Composting Dry Toilet	Sun-Mar	Dry Toilet	White	Dry Toilet is a standard item that comes as a part of the Centrex Composting Toilet product; ADA Compliant
02-P	Composting Dry Toilet	Sun-Mar	Dry Toilet	White	Dry Toilet is a standard item that comes as a part of the Centrex Composting Toilet product; ADA Compliant
03-P	Lavatory	Bradley	LAV6500FM	S.S.	Use 'Bradley' Aerada 900 Series Futura Faucet w/ Accu-Zone Infrared Control
04-P	Lavatory	Bradley	LAV6500FM	S.S.	Use 'Bradley' Aerada 900 Series Futura Faucet w/ Accu-Zone Infrared Control
05-A	Grab Bar	Bradley	001-36"	S.S.	1-1/2" O.D. heavy duty grab bar w/ concealed mounting & (-AM) Antimicrobial Finish
06-A	Grab Bar	Bradley	001-36"	S.S.	1-1/2" O.D. heavy duty grab bar w/ concealed mounting & (-AM) Antimicrobial Finish
07-A	Grab Bar	Bradley	001-42"	S.S.	1-1/2" O.D. heavy duty grab bar w/ concealed mounting & (-AM) Antimicrobial Finish
08-A	Grab Bar	Bradley	001-42"	S.S.	1-1/2" O.D. heavy duty grab bar w/ concealed mounting & (-AM) Antimicrobial Finish
09-A	Towe Dispenser / Waste Receptacle	Bradley	#2027-11	S.S.	Surface-Mounted; ADA Compliant
10-A	Towe Dispenser / Waste Receptacle	Bradley	#2027-11	S.S.	Surface-Mounted; ADA Compliant
11-A	Seat Cover Dispenser	Bradley	#5831	S.S.	Surface-Mounted; ADA Compliant
12-A	Seat Cover Dispenser	Bradley	#5831	S.S.	Surface-Mounted; ADA Compliant
13-A	Soap Dispenser	Bradley	#6542	S.S.	Surface-Mounted; ADA Compliant; Mount horizontally
14-A	Soap Dispenser	Bradley	#6542	S.S.	Surface-Mounted; ADA Compliant; Mount horizontally
15-A	Mirror	Bradley	#748-18"w x 36"h	S.S.	Surface-Mounted; ADA Compliant
16-A	Mirror	Bradley	#748-16"w x 36"h	S.S.	Surface-Mounted; ADA Compliant
17-E	Composting Dry Toilet Tank	Sun-Mar	Centrex 3000 A/F NE	-	Note: This product is a two part item consisting of (1) Centrex 3000 NE and (1) A/F Waterless Kit; Connect 4" vent pipe per manufacturer's recommendations
18-E	Composting Dry Toilet Tank	Sun-Mar	Centrex 3000 A/F NE	-	Note: This product is a two part item consisting of (1) Centrex 3000 NE and (1) A/F Waterless Kit; Connect 4" vent pipe per manufacturer's recommendations
19-E	Grey-water Storage Drum	-	-	-	50 Gal. food-grade plastic drum made from recycled plastic; connect lavatory waste line to grey-water drum
20-E	Grey-water Storage Drum	-	-	-	50 Gal. food-grade plastic drum made from recycled plastic; connect lavatory waste line to grey-water drum

GRAPHIC SCALE MEASURES 1 INCH ON FULL-SIZE PLANS.

1"

LACO ASSOCIATES
CONSULTING ENGINEERS
21 W 4TH ST. EUREKA, CA 95501 (707)443-5054

NO.	DATE	BY	CHK	PROJECT HISTORY
5	6/27/11	EAL	NKT	BID ADDENDUM 1
4	5/24/11	EAL	MAH	100% SUBMITTAL
3	5/18/11	EAL	MAH	PROGRESS SUBMITTAL NO. 1
2	4/15/11	EAL	MAH	75% SUBMITTAL
1	04/07/11	EAL	MAH	DD SUBMITTAL

YUROK VETERANS CEMETERY
INTERIOR ELEVATIONS, SCHEDULES & TYPES

YUROK TRIBE
BALD HILLS RD., HUMBOLDT CO.

SCALE	AS SHOWN
DRAWN	EAL
CHECK	EAL
APPVD	NKT
DATE	05/24/2011
JOB NO.	7105.03
SHEET	A4.2

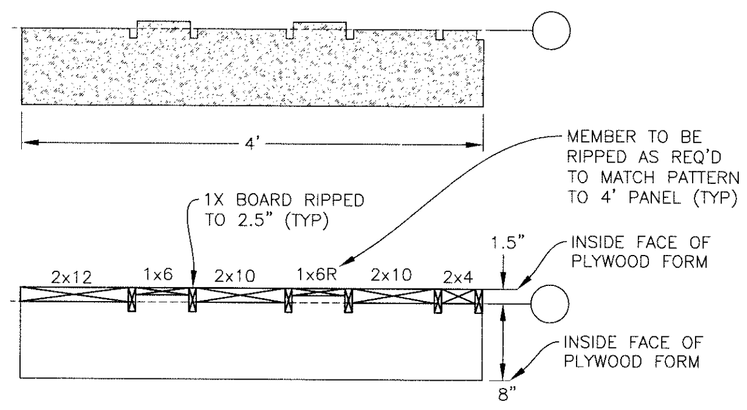

FORM DIAGRAM "A"

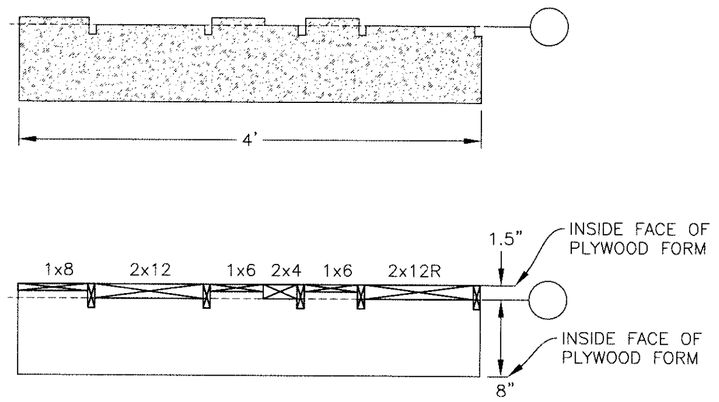

FORM DIAGRAM "B"

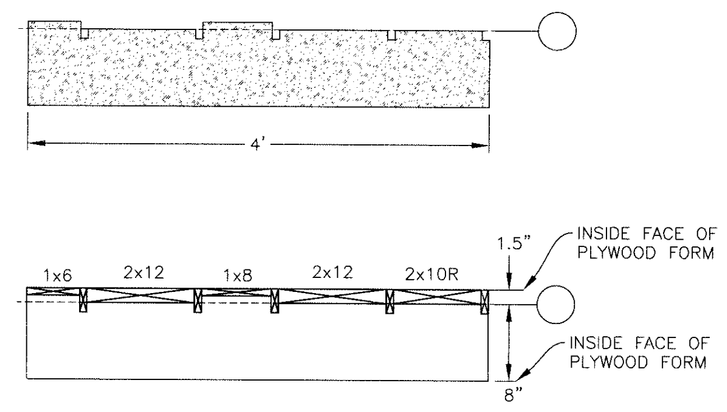

FORM DIAGRAM "C"

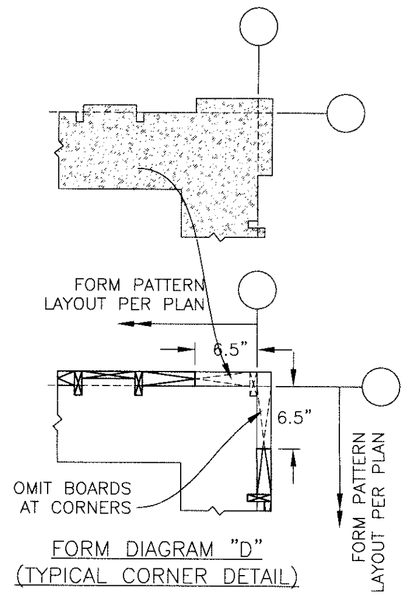

FORM DIAGRAM "D"
(TYPICAL CORNER DETAIL)

1 Concrete Wall Finish Patterns

scale: 1" = 1'-0"

1"

GRAPHIC SCALE MEASURES 1 INCH ON FULL-SIZE PLANS.

REGISTERED PROFESSIONAL ENGINEER (OR LAND SURVEYOR) No. 7025 Exp. 9/30/12 CIVIL STATE OF CALIFORNIA

LACO ASSOCIATES
CONSULTING ENGINEERS
21 W 4TH ST. EUREKA, CA 95501 (707)443-5054

NO.	PROJECT HISTORY	BY	CHK	DATE
5	BID ADDENDUM 1	EAL	NKT	6/27/11
4	100% SUBMITTAL	EAL	MAH	5/24/11
3	PROGRESS SUBMITTAL NO. 1	EAL	MAH	5/18/11
2	75% SUBMITTAL	EAL	MAH	4/15/11
1	DD SUBMITTAL	EAL	MAH	04/07/11

YUROK VETERANS CEMETERY
DETAILS
CONCRETE WALL FINISH PATTERNS

YUROK TRIBE
BALD HILLS RD., HUMBOLDT CO.

SCALE	AS SHOWN
DRAWN	EAL
CHECK	EAL
APPVD	NKT
DATE	05/24/2011
JOB NO.	7105.03
SHEET	**A8.1**

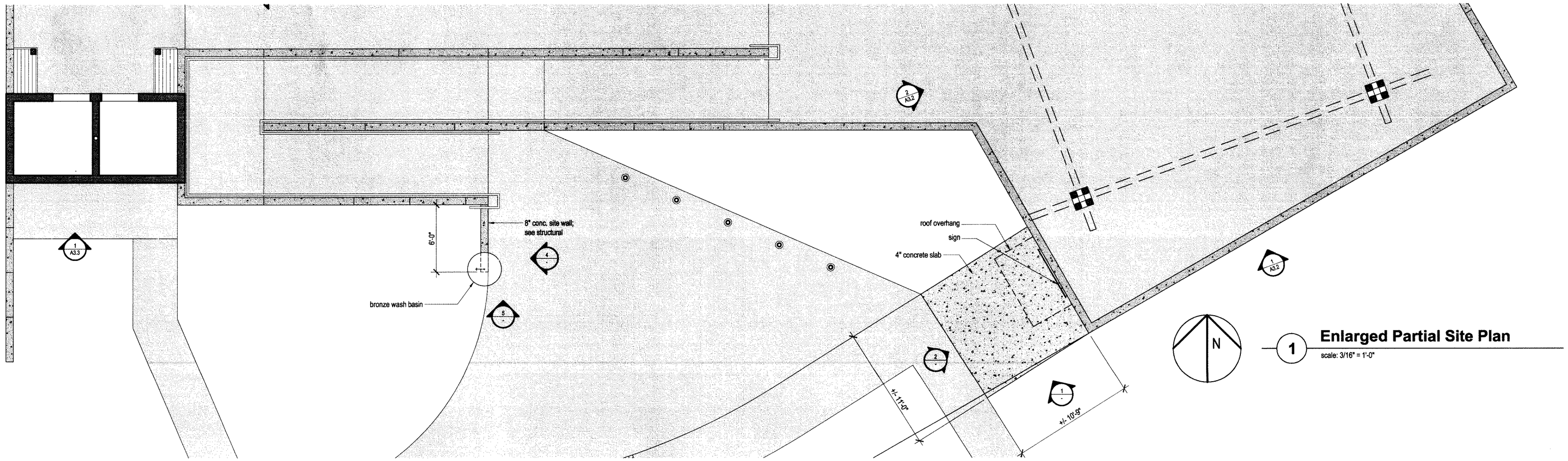

1 Enlarged Partial Site Plan
scale: 3/16" = 1'-0"

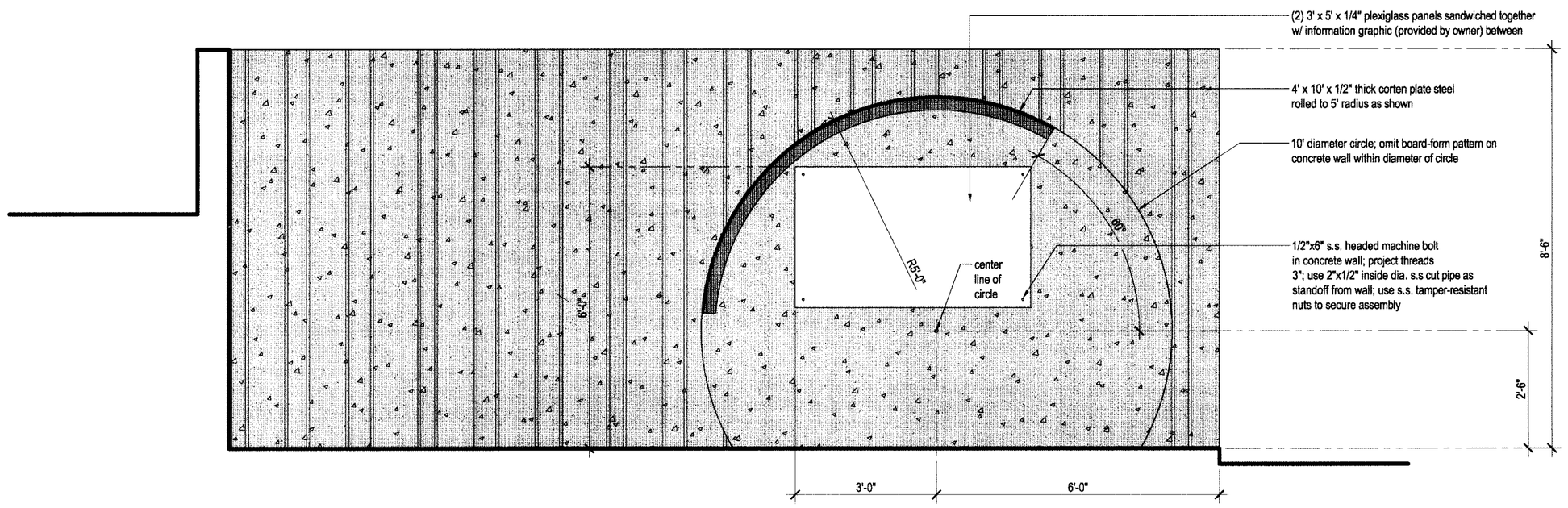

2 West Elevation
scale: 1/2" = 1'-0"

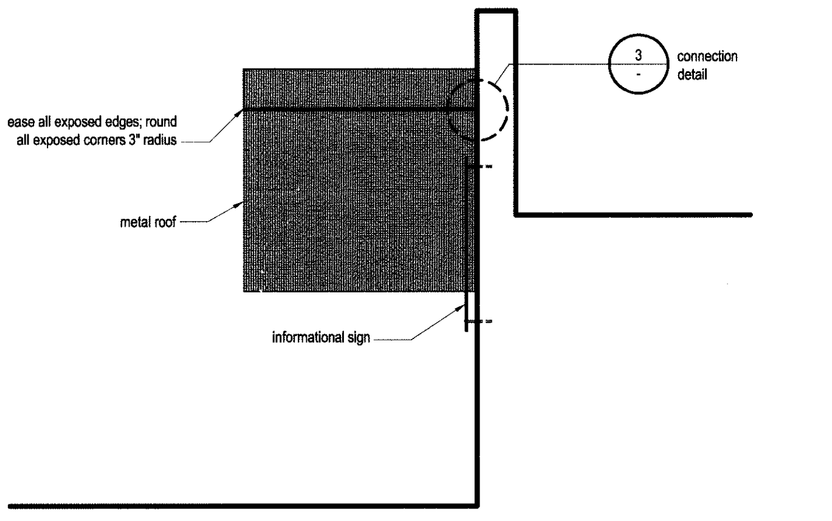

1 South Elevation/Section
scale: 1/2" = 1'-0"

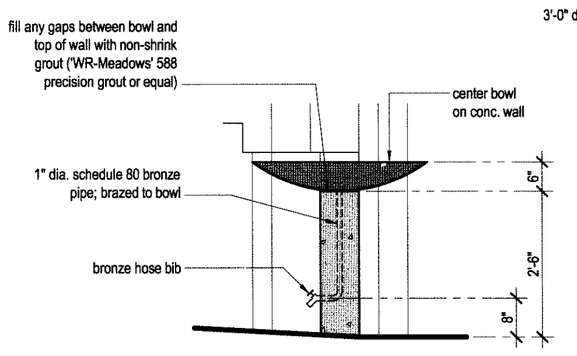

5 South Elevation
scale: 1/2" = 1'-0"

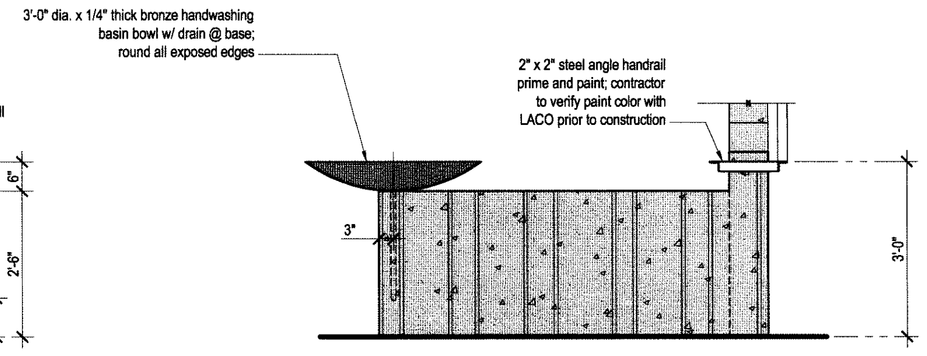

4 East Elevation
scale: 1/2" = 1'-0"

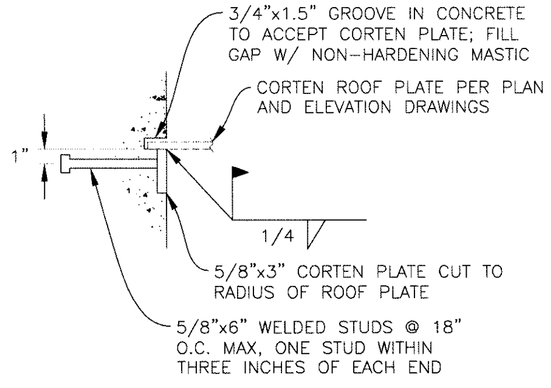

3 Embeded Roof Mounting Plate Detail
scale: 1 1/2" = 1'-0"

1"

GRAPHIC SCALE MEASURES 1 INCH ON FULL-SIZE PLANS.

LACO ASSOCIATES
CONSULTING ENGINEERS
21 W 4TH ST. EUREKA, CA 95501 (707)443-5054

PROFESSIONAL ENGINEER — No. 70251 — Exp. 9/30/12 CIVIL — STATE OF CALIFORNIA — 2-27-11

NO.	PROJECT HISTORY	BY	CHK	DATE
5	BID ADDENDUM 1	EAL	NKT	6/27/11
4	100% SUBMITTAL	EAL	MAH	5/24/11
3	PROGRESS SUBMITTAL NO. 1	EAL	MAH	5/18/11
2	75% SUBMITTAL	EAL	MAH	4/15/11
1	DD SUBMITTAL	EAL	MAH	04/07/11

YUROK VETERANS CEMETERY
HAND-WASHING BASIN & INFO. KIOSK PLANS, ELEVATIONS, DETAILS

YUROK TRIBE
BALD HILLS RD., HUMBOLDT CO.

SCALE	AS SHOWN
DRAWN	EAL
CHECK	EAL
APPVD	NKT
DATE	05/24/2011
JOB NO.	7105.03
SHEET	**A8.2**

GENERAL NOTES

1. ALL WORK SHALL BE IN CONFORMANCE WITH THE CALIFORNIA BUILDING CODE (CBC) 2010 EDITION.
2. DO NOT USE SCALED DIMENSIONS, USE WRITTEN DIMENSIONS. WHERE NO DIMENSIONS ARE SHOWN, CONSULT ENGINEER FOR CLARIFICATION BEFORE PROCEEDING WITH THE WORK.
3. DETAILS OF CONSTRUCTION NOT FULLY SHOWN SHALL BE OF THE SAME NATURE AS SHOWN FOR SIMILAR CONDITIONS.
4. CONTRACTOR SHALL VERIFY CONDITIONS AND DIMENSIONS AT THE SITE BEFORE STARTING WORK AND IMMEDIATELY NOTIFY THE ENGINEER IF ANY CONDITIONS OR DIMENSIONS ARE UNUSUAL OR NOT AS SHOWN ON THESE PLANS.
5. SAFETY:
   5.1. IT IS THE CONTRACTOR'S RESPONSIBILITY TO COMPLY WITH THE PERTINENT SECTIONS OF THE "CONSTRUCTION SAFETY ORDERS" ISSUED BY THE STATE OF CALIFORNIA, AND ALL OSHA REQUIREMENTS AS THEY APPLY TO THIS PROJECT. THE ENGINEER AND THE OWNER DO NOT ACCEPT ANY RESPONSIBILITY FOR THE CONTRACTOR'S FAILURE TO COMPLY WITH THESE REQUIREMENTS.
   5.2. THE CONTRACTOR SHALL BE RESPONSIBLE FOR ADEQUATE DESIGN AND CONSTRUCTION OF ALL FORMS AND SHORING.
6. CONTRACTOR SHALL BE RESPONSIBLE FOR LOCATING ALL UNDERGROUND UTILITIES PRIOR TO EXCAVATION AND CONSTRUCTION IN ANY AREA. CONTRACTOR SHALL CONTACT UNDERGROUND SERVICE ALERT (USA) AT LEAST TWO WORKING DAYS IN ADVANCE OF ANY EXCAVATION. CONTRACTOR SHALL IMMEDIATELY REPORT ANY DISCREPANCIES IN RECORD INFORMATION TO ENGINEER AND DEVELOPER PRIOR TO START OF CONSTRUCTION.
7. ALL EXISTING STRUCTURES, OR PORTIONS THEROF, NOT SPECIFICALLY DESIGNATED FOR DEMOLITION SHALL BE PROTECTED DURING CONSTRUCTION.
8. THESE PLANS SHALL NOT BE CHANGED OR REUSED WITHOUT WRITTEN APPROVAL BY THE ENGINEER.

FOUNDATION NOTES

1. FOUNDATION BEARING AREAS SHALL BE LEVEL, WITH STEPS PROVIDED TO ACCOUNT FOR CHANGES IN SURROUNDING GRADE.
2. EXCAVATIONS SHALL BE MADE AS NEAR AS POSSIBLE TO THE NEAT LINES REQUIRED BY THE SIZE AND SHAPE OF THE STRUCTURE. NO MATERIAL IS TO BE EXCAVATED UNNECESSARILY.
3. DESIGN ALLOWABLE BEARING PRESSURE = 1500 PSF

CONCRETE NOTES

1. CONCRETE MIX DESIGN AND TESTING SHALL MEET THE REQUIREMENTS OF SECTIONS 1903, 1904, AND 1905 OF THE 2010 CBC AND THESE SPECIFICATIONS. MIX DESIGNS SHALL BE SUBMITTED TO THE ENGINEER FOR APPROVAL PRIOR TO CONCRETE PLACEMENT.
2. CONCRETE SHALL BE HARDROCK CONCRETE AND SHALL MEET THE FOLLOWING DESIGN CRITERIA:
   2.1. MINIMUM 28-DAY COMPRESSIVE STRENGTH.....3000 PSI
   2.2. MINIMUM CEMENT CONTENT.....5 SACKS/YD
   2.3. MAXIMUM AGGREGATE SIZE.....1"
   2.4. SLUMP.....4"±1"
3. CONCRETE SHALL BE MIXED, PLACED, AND CURED IN ACCORDANCE WITH ACI 318-08, CHAPTERS 3, 4 AND 5, AND THE PROJECT SPECIFICATIONS.
4. REINFORCING SHALL BE PLACED IN ACCORDANCE WITH THE CONCRETE REINFORCING STEEL INSTITUTE (CRSI) "MANUAL OF STANDARD PRACTICE".
5. CONCRETE SHALL NOT BE DROPPED THROUGH REINFORCING STEEL (AS IN WALLS) SO AS TO CAUSE SEGREGATION OF AGGREGATES. IN SUCH CASES, HOPPERS AND VERTICAL CHUTES SHALL BE USED TO PLACE CONCRETE AS CLOSE AS POSSIBLE TO ITS FINAL POSITION IN THE STRUCTURE. THE CONCRETE SHALL BE PLACED SUCH THAT THE SURFACE REMAINS LEVEL AT ALL TIMES.
6. UNLESS OTHERWISE NOTED, THE SURFACE OF THE CONCRETE AT HORIZONTAL CONSTRUCTION JOINTS SHALL BE PRESSURE WASHED OR MECHANICALLY BRUSHED A MINIMUM OF 24 HOURS AND A MAXIMUM OF 72 HOURS AFTER THE CONCRETE IS PLACED. THE CLEANING SHALL BE SUFFICIENT TO EXPOSE CLEAN, SOLIDLY EMBEDDED AGGREGATE. SEE PLANS AND DETAILS FOR LOCATION AND TYPE OF CONSTRUCTION JOINT.
7. ALL ITEMS TO BE CAST IN CONCRETE SUCH AS REINFORCING DOWELS, BOLTS, ANCHORS, PIPES AND SLEEVES SHALL BE SECURELY POSITIONED IN FORMS BEFORE PLACEMENT OF CONCRETE.

TIMBER SPECIFICATIONS

1. ALL FRAMING NOT SPECIFICALY ADDRESSED IN THESE PLANS SHALL BE AS PRESCRIBED IN CHAPTER 23 OF THE 2010 CALIFORNIA BUILDING CODE.
2. ONLY LOAD BEARING AND/OR SHEAR WALLS ARE SHOWN. SEE ARCHITECTURAL DRAWINGS FOR ALL OTHER PARTITIONS.
3. ONLY MEMBERS CONSTITUTING PARTS OF THE COLLECTOR AND HOLDOWN SYSTEMS ARE SHOWN ON THE SHEARWALL DIAGRAMS; OTHER MEMBERS ARE OMITTED FOR CLARITY.
4. ALL GRADES SPECIFIED ARE MINIMUM GRADES REQUIRED.
5. TIMBERS 4" IN THE LEAST DIMENSION SHALL NOT CONTAIN BOXED HEART.
6. DOUGLAS FIR (DF) SHALL BE GRADED BY THE WESTERN WOOD PRODUCTS ASSOCIATION GRADING RULES, AND ASTM D245.
7. REDWOOD SHALL BE GRADED BY THE CALIFORNIA REDWOOD ASSOCIATION, REDWOOD INSPECTION SERVICE.
8. MINIMUM LUMBER GRADES SHALL BE AS FOLLOWS (UNLESS NOTED OTHERWISE):
   8.1. NON-LOAD BEARING STUDS, TOP PLATES, BLOCKING, FURRING .....DF#2
   8.2. JOISTS, RAFTERS, PURLINS, BEAMS & POSTS.....DF#1
   8.3. LOAD BEARING STUDS 0-15'.....DF#2
   8.4. LOAD BEARING STUDS >15'.....DF#1
   8.5. SILL PLATES .....PRESSURE TREATED SPF#2
9. MOISTURE CONTENT OF SAWN LUMBER SHALL NOT EXCEED 19% WHEN SHEATHING IS APPLIED.
10. HOLES EXCEEDING ONE-THIRD OF THE PLATE WIDTH SHALL NOT BE PLACED IN BEARING OR LATERAL FORCE RESISTING WALLS. WHERE ALLOWED, PIPES SHALL BE PLACED IN THE CENTER OF PLATES, USING A NEAT HOLE, NO NOTCHING ALLOWED. A MAXIMUM 2" DIAMETER HOLE IS ALLOWED IN THE CENTER OF A NOMINAL 2X6 PLATE.
11. STUD BEARING WALLS AND PARTITIONS SHALL HAVE DOUBLE TOP PLATES LAPPED AT WALL AND PARTITION INTERSECTIONS. JOINTS IN UPPER AND LOWER MEMBERS OF DOUBLE TOP PLATES SHALL BE STAGGERED AT LEAST FOUR FEET.
12. NOTCHES SHALL NOT EXCEED ONE SIXTH THE BEAM DEPTH AND SHALL BE LOCATED OUTSIDE THE MIDDLE THIRD OF THE SPAN.
13. THE DIAMETER OF BORED HOLES SHALL NOT EXCEED ONE SIXTH THE BEAM DEPTH. BORED HOLES SHALL BE LOCATED AT THE MIDDLE OF THE BEAM DEPTH AND SHALL BE LOCATED WITHIN THE MIDDLE THIRD OF THE SPAN.
14. HOLES IN WOOD AND STEEL MEMBERS FOR BOLTS SHALL BE THE NOMINAL BOLT DIAMETER PLUS 1/16".
15. HOLES IN WOOD FOR LAG SCREWS SHALL BE FIRST BORED TO THE SAME DIAMETER AND DEPTH AS THE SHANK. HOLES FOR THE THREADED PORTION SHALL BE BORED WITH A BIT NOT LARGER THAN THE BASE OF THREADS.
16. LAG SCREWS AND SCREWS SHALL BE SCREWED AND NOT DRIVEN INTO PLACE.
17. STEEL WASHERS SHALL BE PROVIDED UNDER HEADS AND NUTS OF ALL BOLTS AND LAG SCREWS, WHICH BEAR ON WOOD. STANDARD CUT WASHERS MAY BE USED IN ALL CASES, EXCEPT SILL PLATES AND WOOD LEDGERS AGAINST CONCRETE OR MASONRY, WHICH SHALL BE ONE OF THE FOLLOWING SIZES:

Bolt and Lag Screw Diameter	Steel Plate Washer Size	Malleable Iron Washer Size
1/2"	2" x 2" x 3/8"	2-1/2" dia x 1/4"
5/8"	2 x 2 x 3/8"	2-3/4" dia x 5/16
3/4"	3" x 3" x 5/16"	3" dia x 7/16"
7/8"	3-1/2" x 3-1/2x 5/8"	3-1/2" dia x 7/16
1"	3-3/4" x 3-3/4" x 5/8"	4" dia x 1/2"

18. WASHERS UNDER CARRIAGE BOLT HEADS SHALL BE LARGE ENOUGH TO ALLOW FOR SQUARE SHOULDERS.
19. BOLTS AND SCREWS SHALL BE TIGHTENED AT THE TIME OF ERECTION AND RETIGHTENED BEFORE CLOSING IN OR AT THE COMPLETION OF THE JOB.
20. ALL BOLTS, SCREWS, AND NAILS PENETRATING PRESSURE TREATED LUMBER MUST BE HOT DIPPED ZINC COATED GALVANIZED, STAINLESS STEEL, OR EQUIVALENT.
21. UNLESS NOTED OTHERWISE, ALL FRAMING CONNECTOR REFERENCES INDICATE SIMPSON STRONG-TIE PART NUMBERS.

REINFORCING STEEL NOTES

1. REINFORCING GRADES FOR CONCRETE AND MASONRY:
   1.1. ALL BARS UNLESS NOTED OTHERWISE.....ASTM A615 GRADE 60
   1.2. TIES AND STIRRUPS.....ASTM A615 GRADE 40
   1.3. WELDED WIRE FABRIC.....ASTM A185
2. REINFORCING STEELSHALL NOT BE WELDED
3. STEEL SHALL BE KEPT CLEAN AND FREE OF RUST.
4. SHOP DRAWINGS SHALL BE SUBMITTED TO THE ENGINEER PRIOR TO FABRICATION AND DELIVERY OF REINFORCING STEEL.
5. SPLICES IN CONTINUOUS REINFORCING AS USED IN WALLS, WALL FOOTINGS, ETC., SHALL HAVE CLASS "B" LAP SPLICES (24" MIN) AND SPLICES IN ADJACENT BARS SHALL BE NOT LESS THAN 60" APART. VERTICAL WALL BARS SHALL BE SPLICED AT OR NEAR FLOOR LINES. BARS SHALL BE WIRED TOGETHER AT SPLICES OR LAPS, EXCEPT FOR TOP REINFORCING OF BEAMS AND SLABS OR WHERE DEFINITELY DETAILED TO BE SEPARATED. SEE BEAM DETAILS OR SCHEDULES FOR SEPARATION OF BEAM OR GIRDER BARS OVER SUPPORTS. WELDED WIRE FABRIC SHALL BE LAPPED 12" MINIMUM.
6. REINFORCEMENT PROTECTION:
   6.1. CONCRETE POURED AGAINST EARTH.....3"
   6.2. CONCRETE PLACED IN FORMS, BUT EXPOSED TO WEATHER OR EARTH:
      6.2.1. IF BARS ARE LARGER THAN #5.....3"
      6.2.2. IF BARS ARE #5 OR SMALLER.....1-1/2"
   6.3. COLUMNS, GIRDERS, AND BEAMS.....1-1/2"
   6.4. INTERIOR WALLS AND SLABS.....1-1/2"
   6.5. STRUCTURAL SLABS ON GRADE.....2" FROM BOTTOM
      .....1" FROM TOP
   6.6. NON-STRUCTURAL SLABS ON GRADE.....2" FROM TOP
7. EACH REINFORCING BAR SHALL BE WIRED TO A CROSS BAR AT A MAXIMUM SPACING OF 24"
8. ALL REINFORCING BARS SHALL BE TERMINATED IN LAPS, 90 DEGREE BENDS, OR WITH DOWELS INTO (E) CONCRETE. BEND TOP FOOTING BARS DOWN TO BOTTOM STEEL. BEND BOTTOM FOOTING BARS UP WITH STANDARD 90 DEGREE BENDS. PROVIDE DOWELS INTO WALLS OF THE SAME SIZE AND SPACING AS WALL VERTICAL REINFORCEMENT. REINFORCING STEEL MAY LAP WITH COUPLERS WHICH ARE 125% OF BAR STRENGTH. AN ICBO REPORT MUST BE SUBMITTED FOR COUPLERS.
9. DETAIL BARS IN ACCORDANCE WITH ACI DETAILING MANUAL, 1994. PROVIDE ALL ACCESSORIES NECESSARY TO SUPPORT REINFORCING STEEL IN THE POSITIONS SHOWN ON THE PLANS.
10. ALL DOWELS, ANCHOR BOLTS, AND OTHER HARDWARE TO BE SET IN CONCRETE SHALL BE TIED IN PLACE PRIOR TO PLACEMENT OF CONCRETE.

SPECIAL INSPECTION NOTES

1. THE FOLLOWING WORK SHALL BE INSPECTED IN ACCORDANCE WITH THE 2010 CBC, WITH A FINAL REPORT TO BE PROVIDED TO THE BUILDING OFFICIAL AT THE COMPLETION OF CONSTRUCTION. BUILDER SHALL NOTIFY THE INSPECTOR AT LEAST THREE WORKING DAYS IN ADVANCE OF REQUIRED INSPECTIONS:

   1.1. CONTINUOUS VERIFICATION AND INSPECTION:
      1.1.1. INSPECTION OF ALL STRUCTURAL CONCRETE PLACEMENT
      1.1.2. INSPECTION AT THE TIME FRESH CONCETE IS SAMPLED TO FABRICATE SPECIMENS FOR STRENGTH TESTS, PERFORM SLUMP AND AIR CONTENT TESTS, AND DETERMINE THE TEMPERATURE OF THE CONCRETE
      1.1.3. INSPECTION OF EPOXY ANCHOR INSTALATION

   1.2. PERIODIC VERIFICATION AND INSPECTION:
      1.2.1. VERIFY USE OF REQUIRED CONCRETE DESIGN MIX.
      1.2.2. INSPECTION OF REINFORCING STEEL AND PLACEMENT.

SUBMITTALS

CONTRATOR SHALL SUBMIT THE FOLLOWING INFORMATION AT LEAST TWO WEEKS IN ADVANCE OF CONSTRUCTION OR FABRICATION OF MATERIALS:

1. CONCRETE MIX DESIGN
2. REBAR SHOP DRAWING
3. GLULAM BEAM SHOP DRAWINGS
4. STRUCTURAL STEEL SHOP DRAWINGS

ABBREVIATIONS

AB	ANCHOR BOLT
ARCH	ARCHITECTURAL
ATS	ANCHOR TIEDOWN SYSTEM (SIMPSON)
AWS	AMERICAN WELDING SOCIETY
BLDG	BUILDING
BLK'G	BLOCKING
BM	BEAM
CB	COLUMN BASE
CL	CENTERLINE
CJ	CONSTRUCTION JOINT
CLR	CLEAR
COL	COLUMN
CONN	CONNECTION
CONT	CONTINUOUS
CJP	COMPLETE JOINT PENETRATION
CTR	CENTER
DET	DETAIL
DF	DOUGLAS FIR
DWG	DRAWING
EA	EACH
EF	EACH FACE
ELEV	ELEVATION
ELECT	ELECTRICAL
EL	END LENGTH
EN	END OR EDGE NAIL
EW	EACH WAY
EXT	EXTERIOR
FDN	FOUNDATION
FL	FLOOR
FTG	FOOTING
GA	GAUGE
GALV	HOT-DIP GALVANIZED
GLB	GLULAM BEAM
HGR	HANGER
HORIZ	HORIZONTAL
HSS	HOLLOW STRUCTURAL SECTION
INT	INTERIOR
ID	INSIDE DIAMETER
LN	LINE
LFRS	LATERAL FORCE RESISTING SYSTEM
MB	UNFINISHED MACHINE BOLT
MAX	MAXIMUM
MECH	MECHANICAL
MTL	METAL
MIN	MINIMUM
NTS	NOT TO SCALE
OC	ON CENTER
OD	OUTSIDE DIAMETER
OPP	OPPOSITE
PL	PLATE
PLY	PLYWOOD
PT	POST-TENSIONED
REQ	REQUIRED
SCHED	SCHEDULE
SECT	SECTION
SIM	SIMILAR
SPEC	SPECIFICATION
SQ	SQUARE
STRUCT	STRUCTURAL
SYMMSYMMETRICAL	
T&B	TOP AND BOTTOM
T&G	TONGUE AND GROOVE
TOC	TOP OF CONCRETE
TOF	TOP OF FOOTING
TOP	TOP OF PLATE
TOS	TOP OF STEEL
TOW	TOP OF WALL
TYP	TYPICAL
UNO	UNLESS NOTED OTHERWISE
W/	WITH
W/O	WITHOUT
WF	WIDE FLANGE BEAM
WWF	WELDED WIRE FABRIC

STANDARD HOOKS AND BENDS

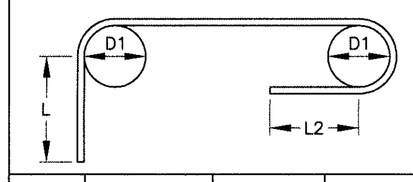

BAR SIZE	90° HOOK LENGTH "L"	INSIDE DIA. "D1"	180° HOOK LENGTH "L2"
3	4.5"	2.25"	2.5"
4	6"	3"	2.5"
5	7.5"	3.75"	2.5"
6	9"	4.5"	3"
7	10.5"	5.25"	3.5"
8	12"	6"	4"
9	13.5"	9.5"	4.5"
10	15.25"	10.75"	5.25"
11	17"	12"	5.75"

REBAR LAP SPLICES

BAR NO.	CLASS-A SPLICE	CLASS-B SPLICE
3	18"	24"
4	24"	32"
5	30"	40"
6	36"	48"
7	54"	70"
8	60"	78"

Fc'=3000PSI MIN, Fy = 60KSI

LACO ASSOCIATES
CONSULTING ENGINEERS
21 W 4TH ST. EUREKA, CA 95501 (707)443-5054

NO.	REVISION	BY	CHK	DATE
5	BID ADDENDUM 1	TAM	NKT	6/27/11
4	100% SUBITTAL	TAM	NKT	5/24/11
3	PROGRESS SUBMITTAL #1	TAM	NKT	5/18/11
2	75% SUBMITTAL	TAM	NKT	4/15/11
1	DD SUBMITTAL	TAM	NKT	04/07/11

YUROK VETERANS CEMETERY
NOTES

YUROK TRIBE
BALDS HILL RD. HUMBOLDT CO.

SCALE	AS SHOWN
DRAWN	TAM
CHECK	NKT
APPVD	NKT
DATE	02/22/2011
JOB NO.	7105.03
SHEET	**S0.1**

Jun 26,2011-1:03pm F:\Coalfiles\7100\7105 YUROK VETERANS CEMETERY\DWG\ 7105-03 STRUCTURALS.dwg

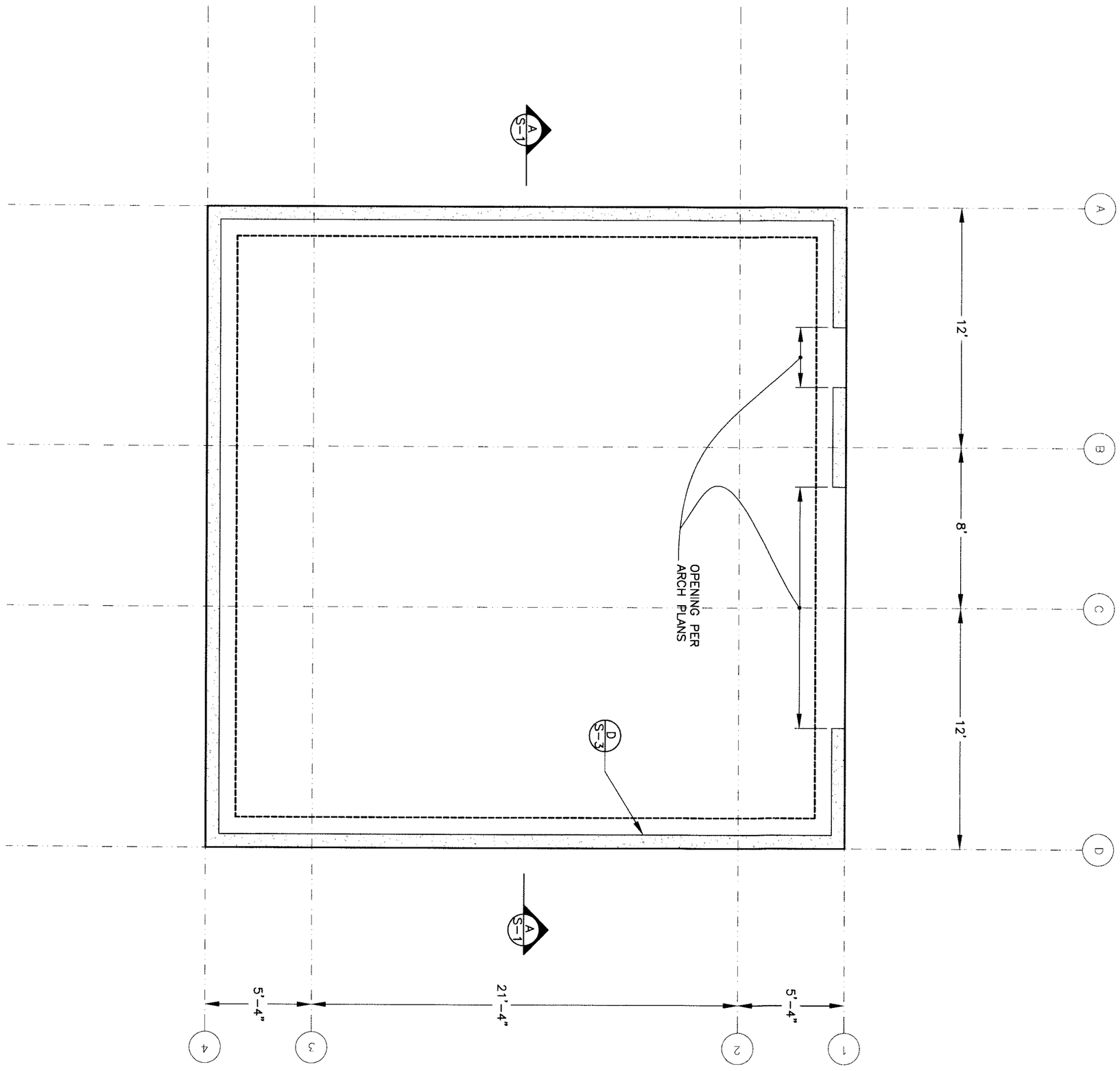

FOUNDATION PLAN
SCALE: 1/4" = 1'

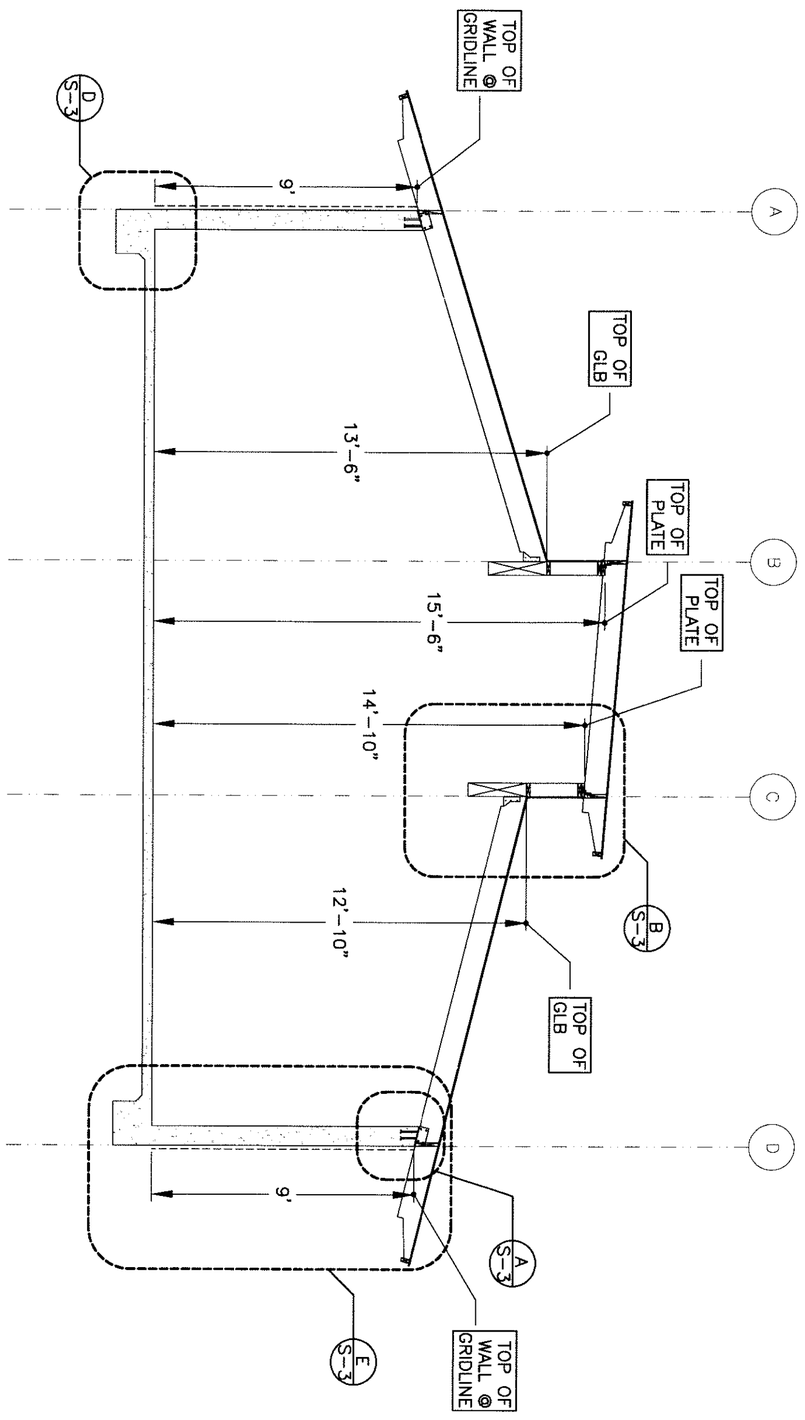

A/- BUILDING SECTION
1/4"=1'

SCALE	AS SHOWN
DRAWN	TAM
CHECK	NKT
APPVD	NKT
DATE	02/22/2011
JOB NO.	7105.03
SHEET	**S1**

YUROK VETERANS CEMETERY
MAINTENANCE BUILDING FOUNDATION PLAN AND SECTION

YUROK TRIBE
BALDS HILL RD. HUMBOLDT CO.

NO.	REVISION	BY	CHK	DATE
5	BID ADDENDUM 1	TAM	NKT	6/27/11
4	100% SUBITTAL	TAM	NKT	5/24/11
3	PROGRESS SUBMITTAL #1	TAM	NKT	5/18/11
2	75% SUBMITTAL	TAM	NKT	4/15/11
1	DD SUBMITTAL	TAM	NKT	04/07/11

LACO ASSOCIATES
CONSULTING ENGINEERS
21 W 4TH ST. EUREKA, CA 95501 (707)443-5054

REGISTERED PROFESSIONAL ENGINEER
MATTHEW K. KOHLER
No. 70251
Exp. 9/30/12
6-26-11
CIVIL
STATE OF CALIFORNIA

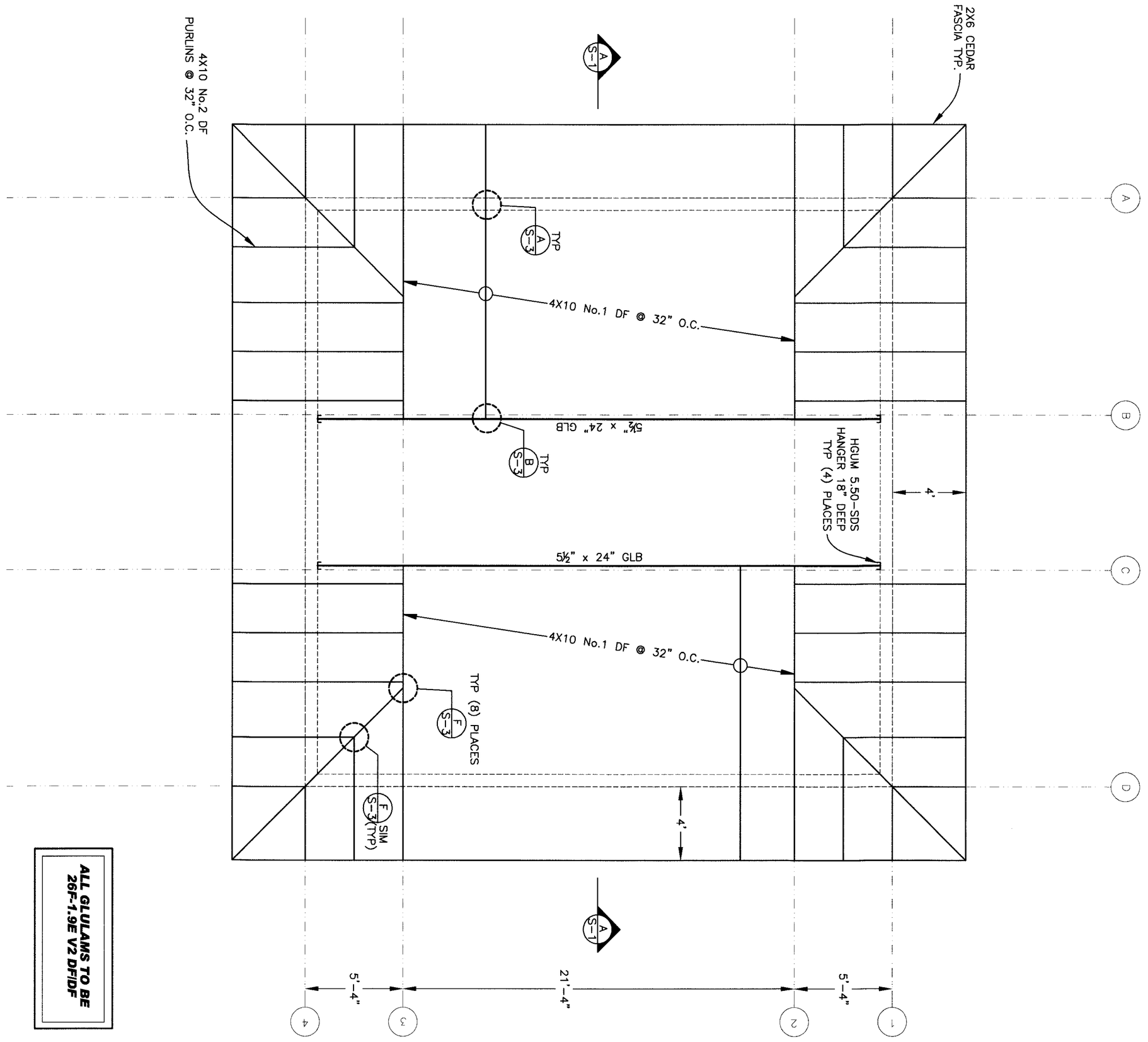

LOWER ROOF FRAMING PLAN
SCALE: 1/4" = 1'

ALL GLULAMS TO BE 26F-1.9E V2 DF/DF

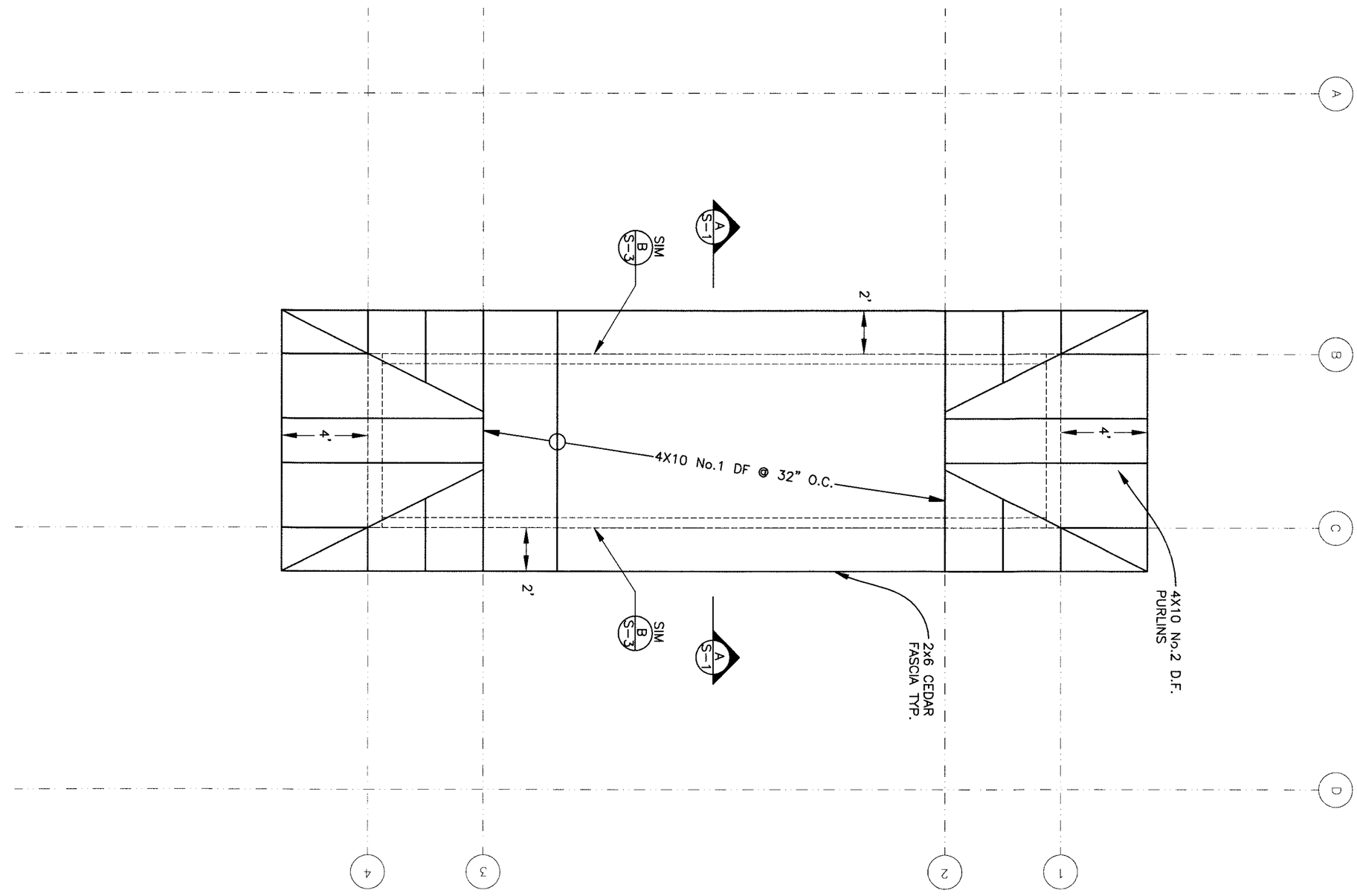

UPPER ROOF FRAMING PLAN
SCALE: 1/4" = 1'

SCALE	AS SHOWN
DRAWN	TAM
CHECK	NKT
APPVD	NKT
DATE	02/22/2011
JOB NO.	7105.03
SHEET	S2

YUROK VETERANS CEMETERY
MAINTENANCE BUILDING ROOF FRAMING

YUROK TRIBE
BALDS HILL RD. HUMBOLDT CO.

NO.	REVISION	BY	CHK	DATE
5	BID ADDENDUM 1	TAM	NKT	6/27/11
4	100% SUBITTAL	TAM	NKT	5/24/11
3	PROGRESS SUBMITTAL #1	TAM	NKT	5/18/11
2	75% SUBMITTAL	TAM	NKT	4/15/11
1	DD SUBMITTAL	TAM	NKT	04/07/11

LACO ASSOCIATES
CONSULTING ENGINEERS
21 W 4TH ST. EUREKA, CA 95501 (707)443-5054

REGISTERED PROFESSIONAL ENGINEER MATTHEW K. KOHLER No. 70251 Exp. 9/30/12 CIVIL STATE OF CALIFORNIA
6-22-11

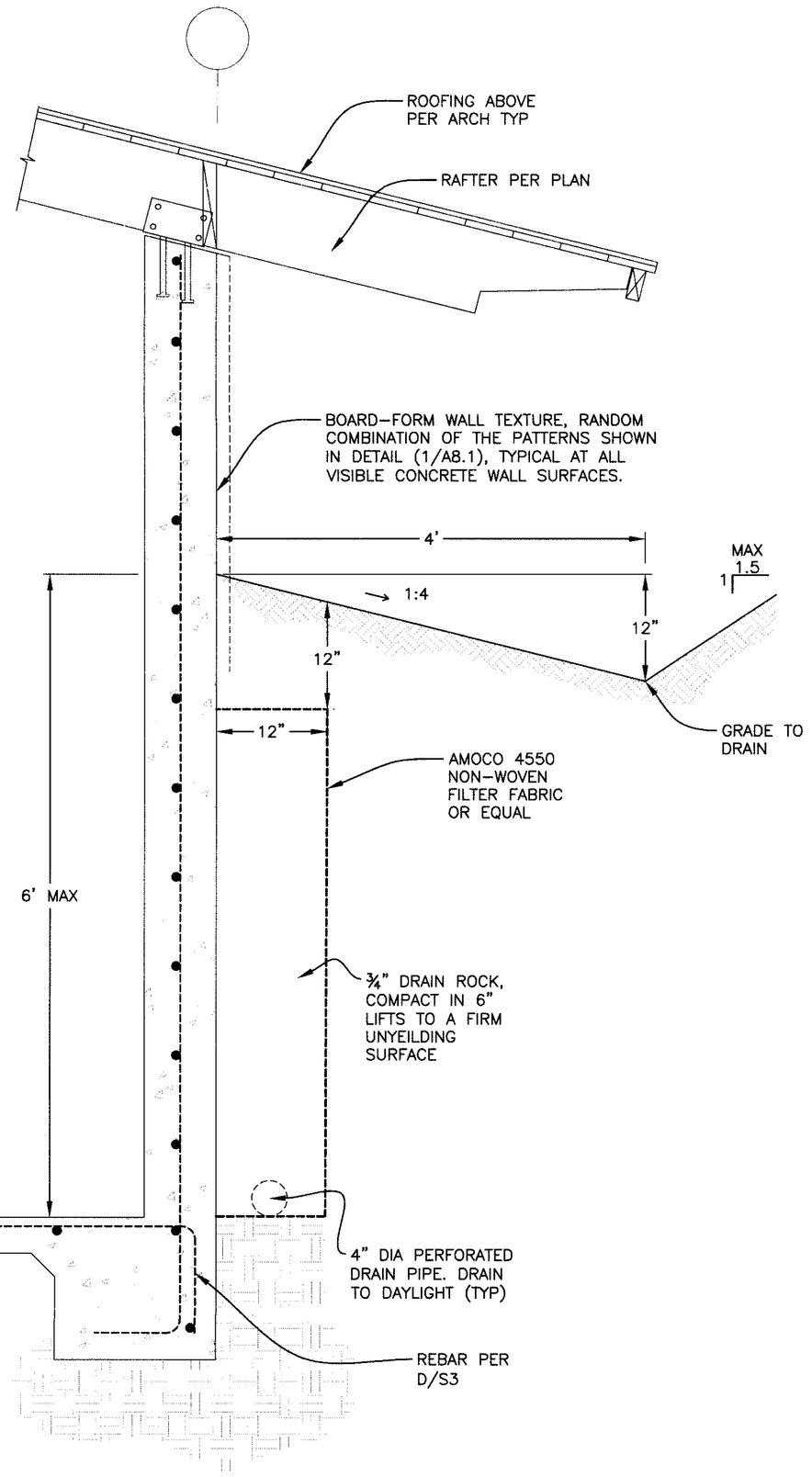

E RETAINING WALL DETAIL
1"=1'

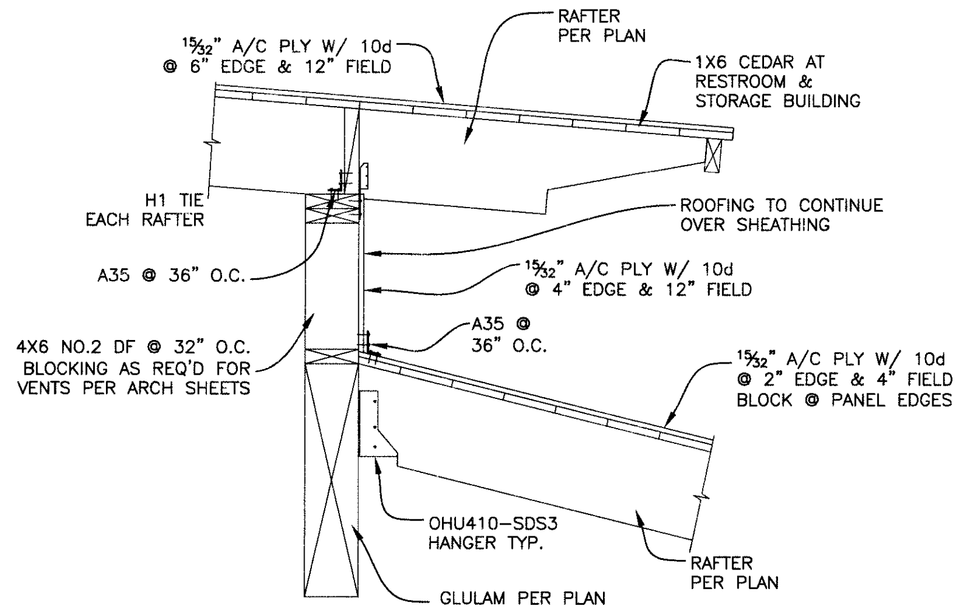

B UPPER LEVEL FRAMING DETAIL
1"=1'

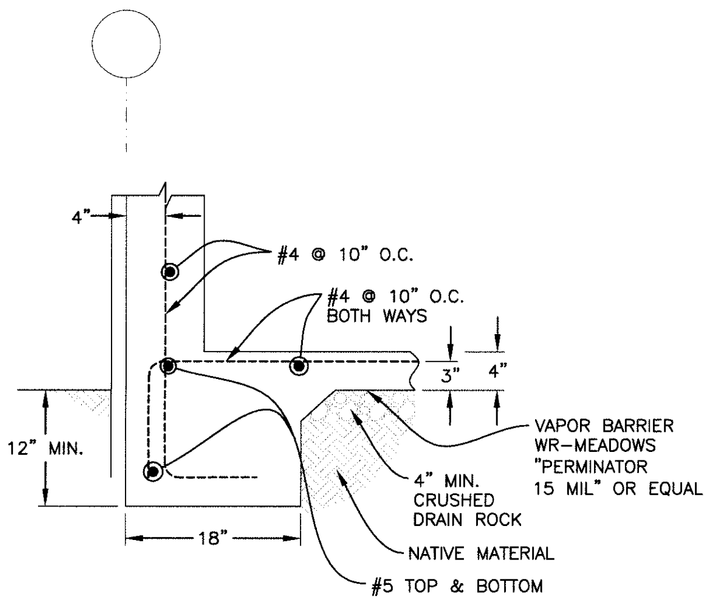

D WALL & FOOTING DETAIL
1"=1'

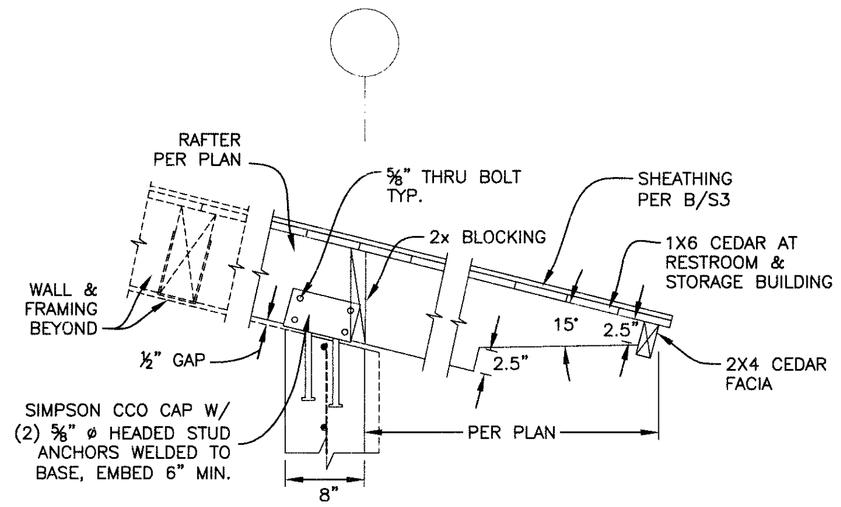

A RAFTER CONNECTION DETAIL
1"=1'

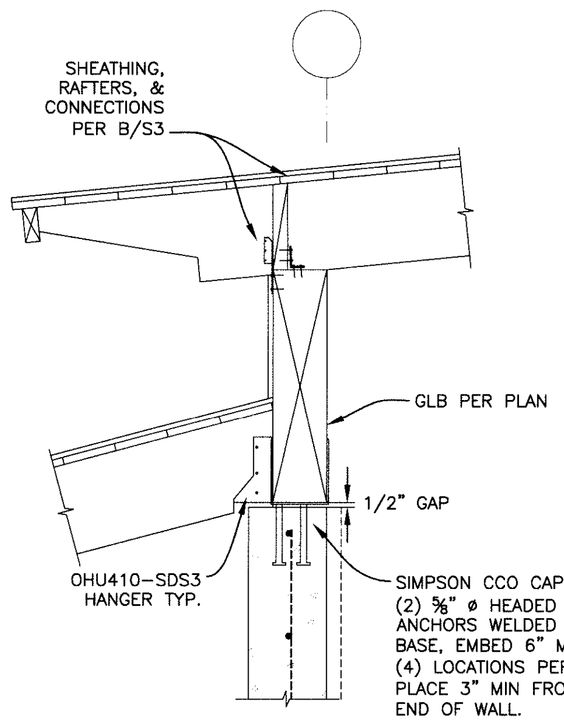

C GLULAM CONNECTION @ STORAGE ROOM
1"=1'

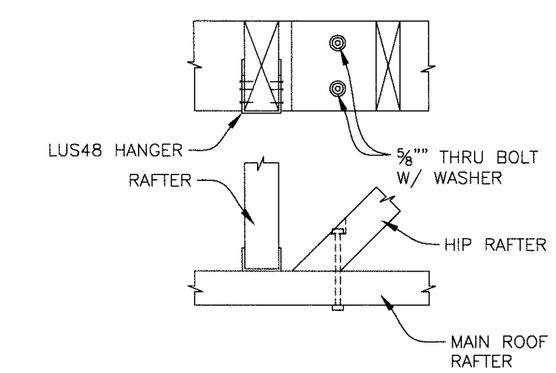

F RAFTER CONNECTION DETAIL
1"=1'

LACO ASSOCIATES
CONSULTING ENGINEERS
21 W 4TH ST. EUREKA, CA 95501 (707)443-5054

NO.	REVISION	BY	CHK	DATE
5	BID ADDENDUM 1	TAM	NKT	6/27/11
4	100% SUBITTAL	TAM	NKT	5/24/11
3	PROGRESS SUBMITTAL #1	TAM	NKT	5/18/11
2	75% SUBMITTAL	TAM	NKT	4/15/11
1	DD SUBMITTAL	TAM	NKT	04/07/11

YUROK VETERANS CEMETERY
MAINTENANCE BUILDING DETAILS

YUROK TRIBE
BALDS HILL RD. HUMBOLDT CO.

SCALE	AS SHOWN
DRAWN	TAM
CHECK	NKT
APPVD	NKT
DATE	02/22/2011
JOB NO.	7105.03
SHEET	**S3**

Jun 28,2011-1:27pm
T:\CadFiles\7100\7105 YUROK VETERANS CEMETERY\DWG\ 7105-03 STRUCTURAL3.dwg

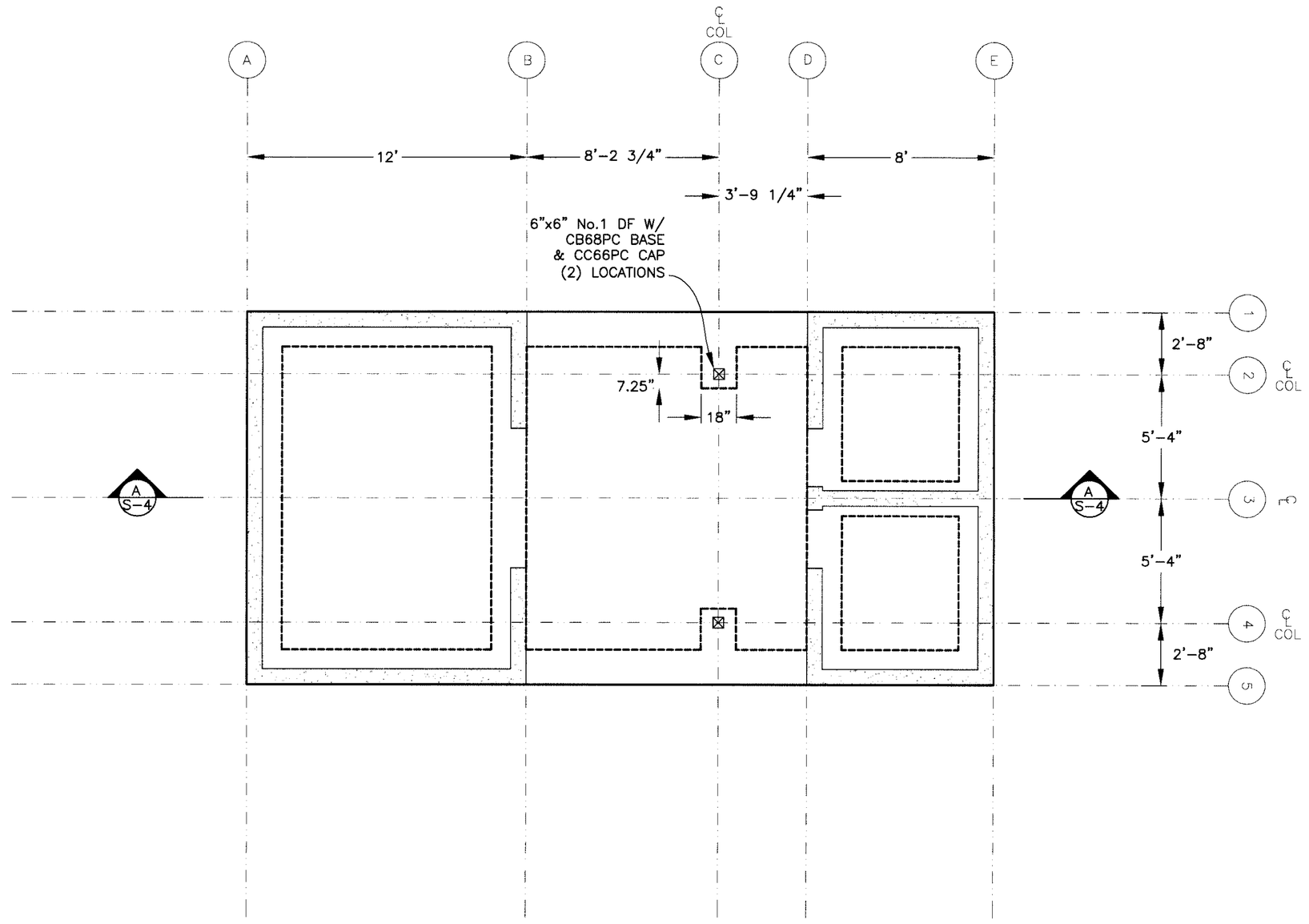

FOUNDATION PLAN

SCALE: 1/4" = 1'

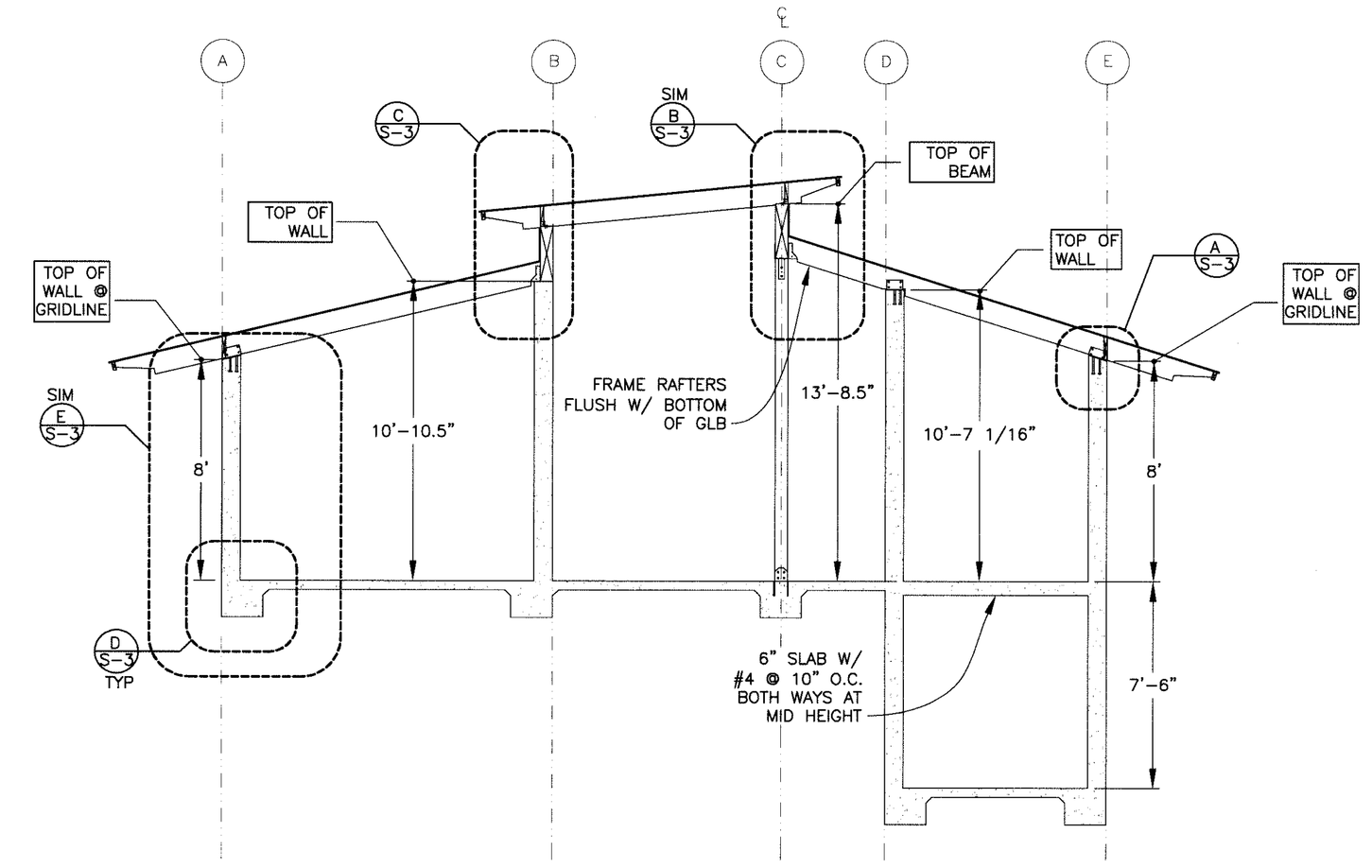

BUILDING SECTION

1/4"=1'

LACO ASSOCIATES
CONSULTING ENGINEERS
21 W 4TH ST. EUREKA, CA 95501 (707)443-5054

NO.	REVISION	BY	CHK	DATE
5	BID ADDENDUM 1	TAM	NKT	6/27/11
4	100% SUBITTAL	TAM	NKT	5/24/11
3	PROGRESS SUBMITTAL #1	TAM	NKT	5/18/11
2	75% SUBMITTAL	TAM	NKT	4/15/11
1	DD SUBMITTAL	TAM	NKT	04/07/11

YUROK VETERANS CEMETERY
RESTROOM FOUNDATION PLAN & SECTION

YUROK TRIBE
BALDS HILL RD. HUMBOLDT CO.

SCALE	AS SHOWN
DRAWN	TAM
CHECK	NKT
APPVD	NKT
DATE	02/22/2011
JOB NO.	7105.03
SHEET	**S4**

Jun 25,2011-1:35pm
T:\Cadfiles\7100\7105 YUROK VETERANS CEMETERY\DWG\ 7105-02 STRUCTURALS.dwg

LOWER ROOF FRAMING PLAN

SCALE: 1/4" = 1'

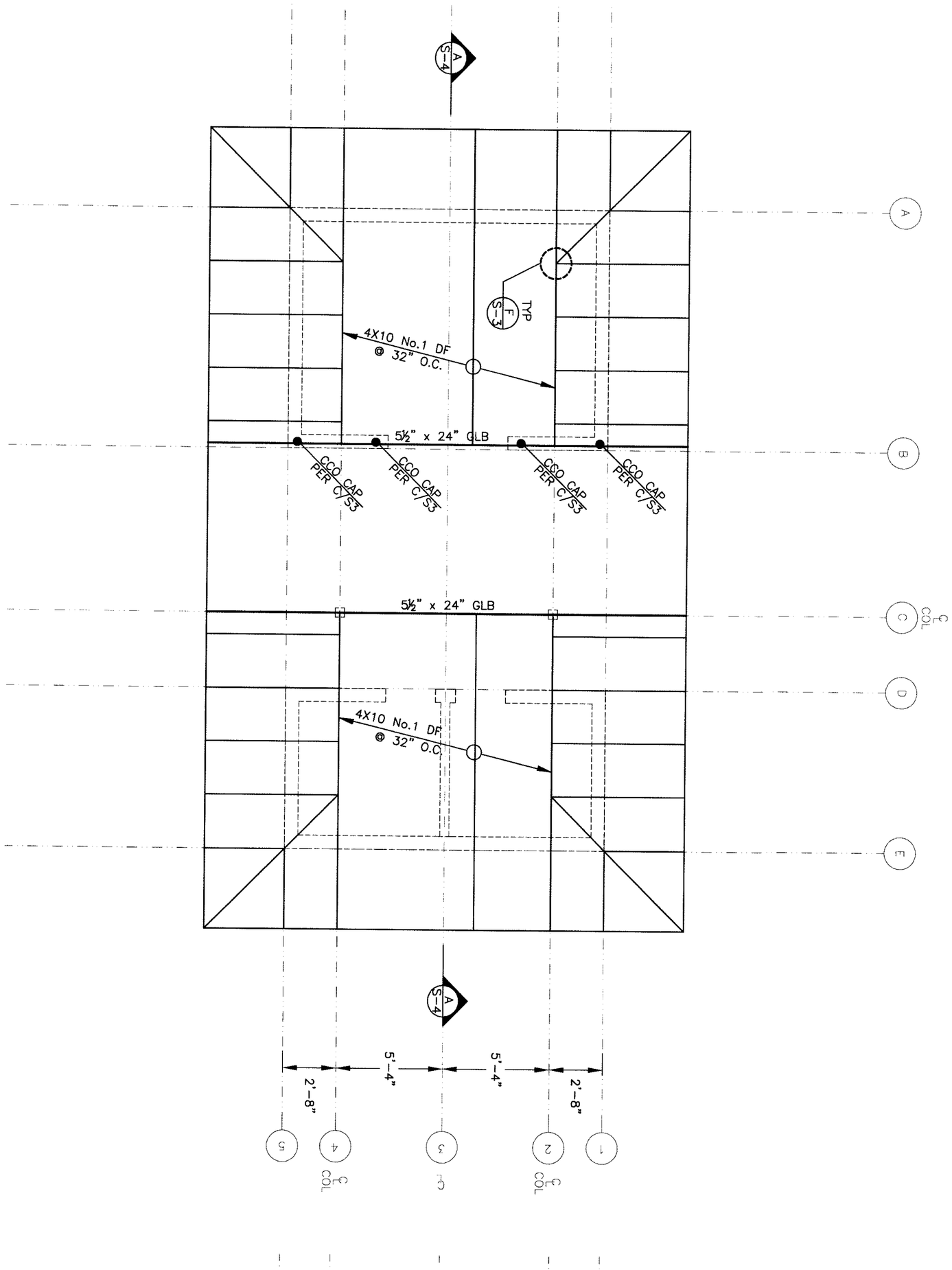

ALL GLULAMS TO BE 26F-1.9E V2 DF/DF

UPPER ROOF FRAMING PLAN

SCALE: 1/4" = 1'

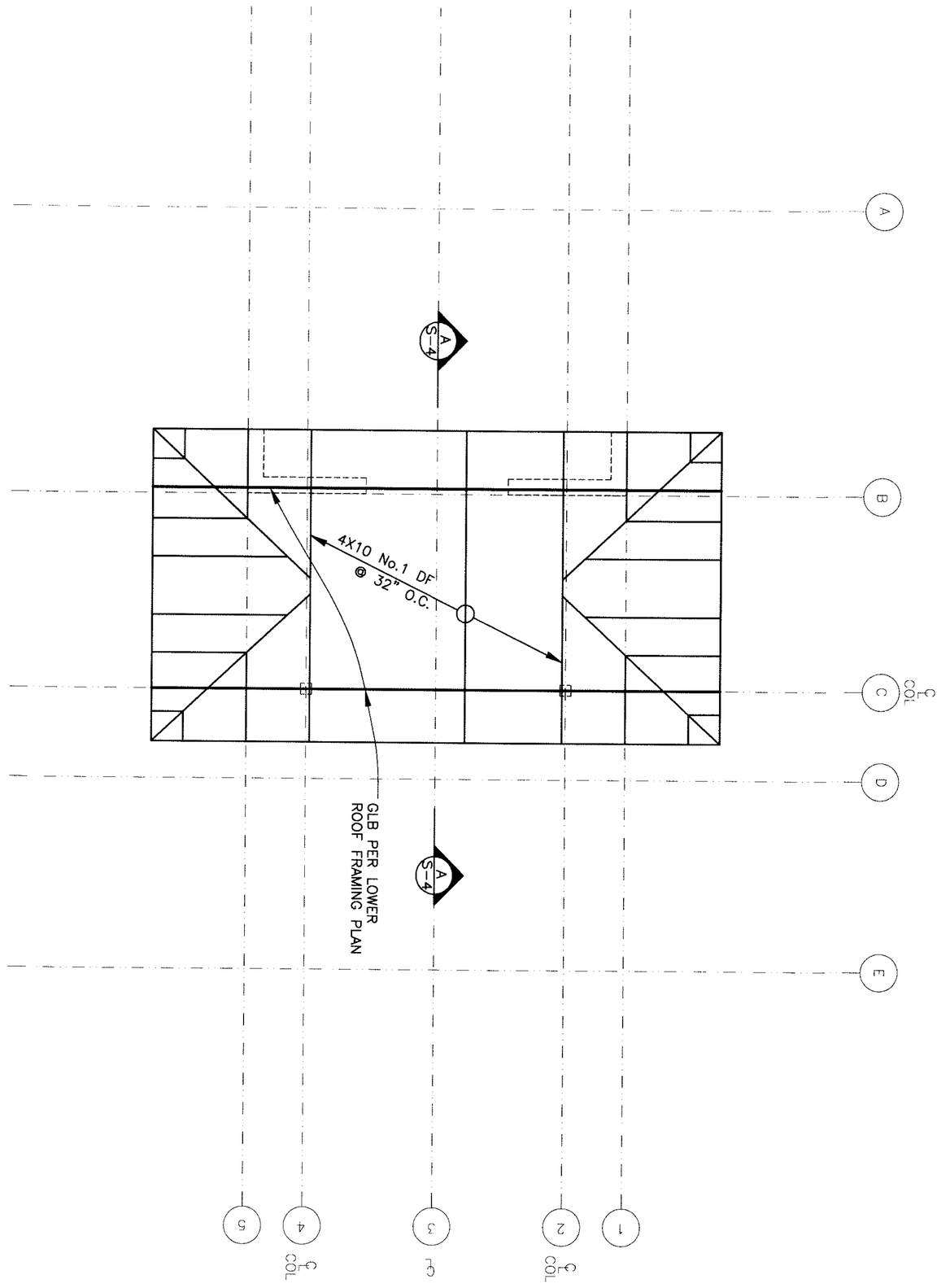

SCALE	AS SHOWN
DRAWN	TAM
CHECK	NKT
APPVD	NKT
DATE	02/22/2011
JOB NO.	7105.03
SHEET	**S5**

YUROK VETERANS CEMETERY
ROOF FRAMING PLAN

YUROK TRIBE
BALDS HILL RD. HUMBOLDT CO.

NO.	REVISION	BY	CHK	DATE
5	BID ADDENDUM 1	TAM	NKT	6/27/11
4	100% SUBITTAL	TAM	NKT	5/24/11
3	PROGRESS SUBMITTAL #1	TAM	NKT	5/18/11
2	75% SUBMITTAL	TAM	NKT	4/15/11
1	DD SUBMITTAL	TAM	NKT	04/07/11

LACO ASSOCIATES
CONSULTING ENGINEERS
21 W 4TH ST. EUREKA, CA 95501 (707)443-5054

REGISTERED PROFESSIONAL ENGINEER
NATHAN K. KOHLER
No. 70251
Exp. 9/30/12
CIVIL
STATE OF CALIFORNIA
6-26-11

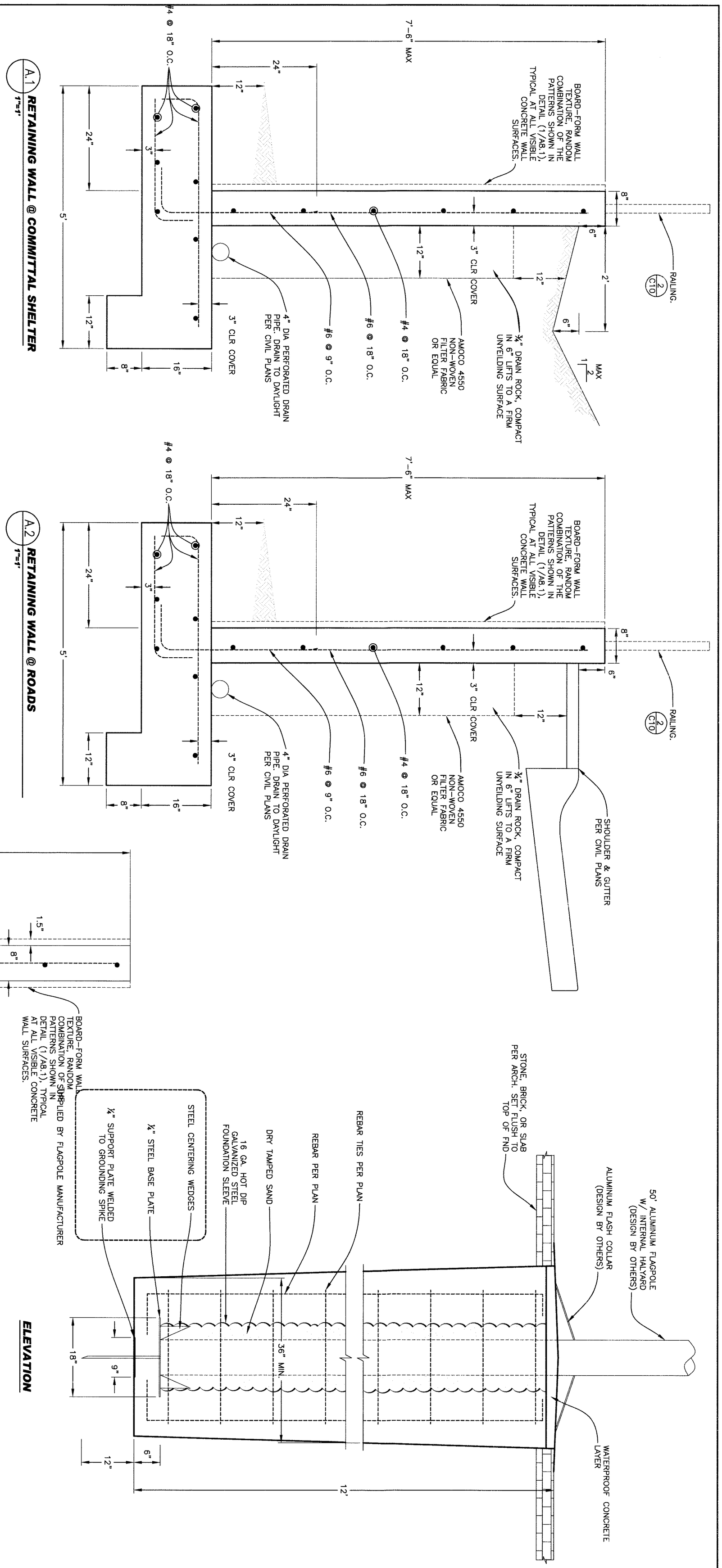

SCALE	AS SHOWN
DRAWN	TAM
CHECK	NKT
APPVD	NKT
DATE	02/22/2011
JOB NO.	7105.03
SHEET	S7

YUROK VETERANS CEMETERY
RETAINING WALLS AND FLAGPOLE

YUROK TRIBE
BALDS HILL RD. HUMBOLDT CO.

NO.	REVISION	BY	CHK	DATE
5	BID ADDENDUM 1	TAM	NKT	6/27/11
4	100% SUBITTAL	TAM	NKT	5/24/11
3	PROGRESS SUBMITTAL #1	TAM	NKT	5/18/11
2	75% SUBMITTAL	TAM	NKT	4/15/11
1	DD SUBMITTAL	TAM	NKT	04/07/11

LACO ASSOCIATES
CONSULTING ENGINEERS
21 W 4TH ST. EUREKA, CA 95501 (707)443-5054

REGISTERED PROFESSIONAL ENGINEER NATHAN KOHLER TOFFAN No. 70251 Exp. 9/30/12 CIVIL STATE OF CALIFORNIA

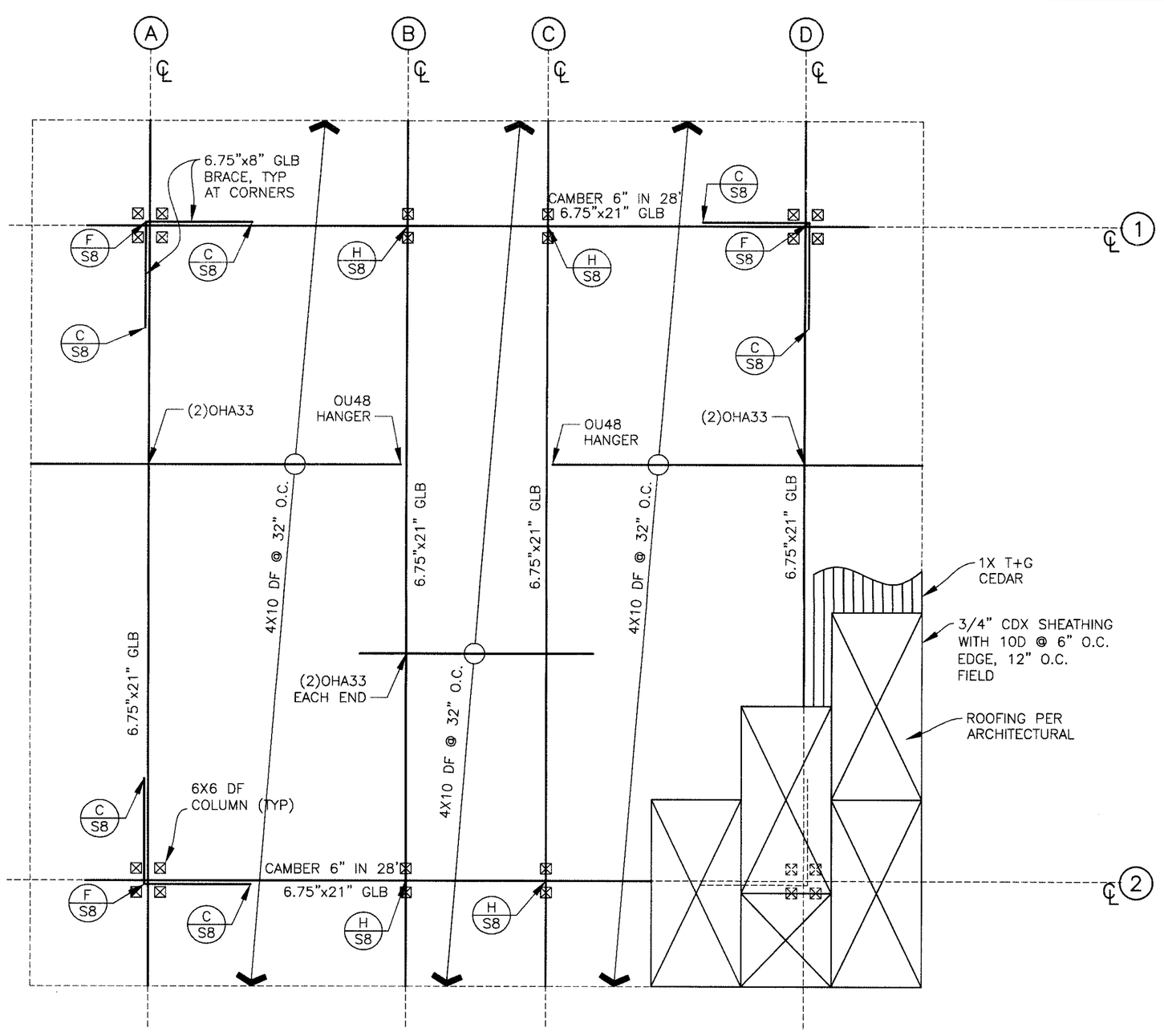

ROOF FRAMING PLAN
SCALE: 1/4" = 1'

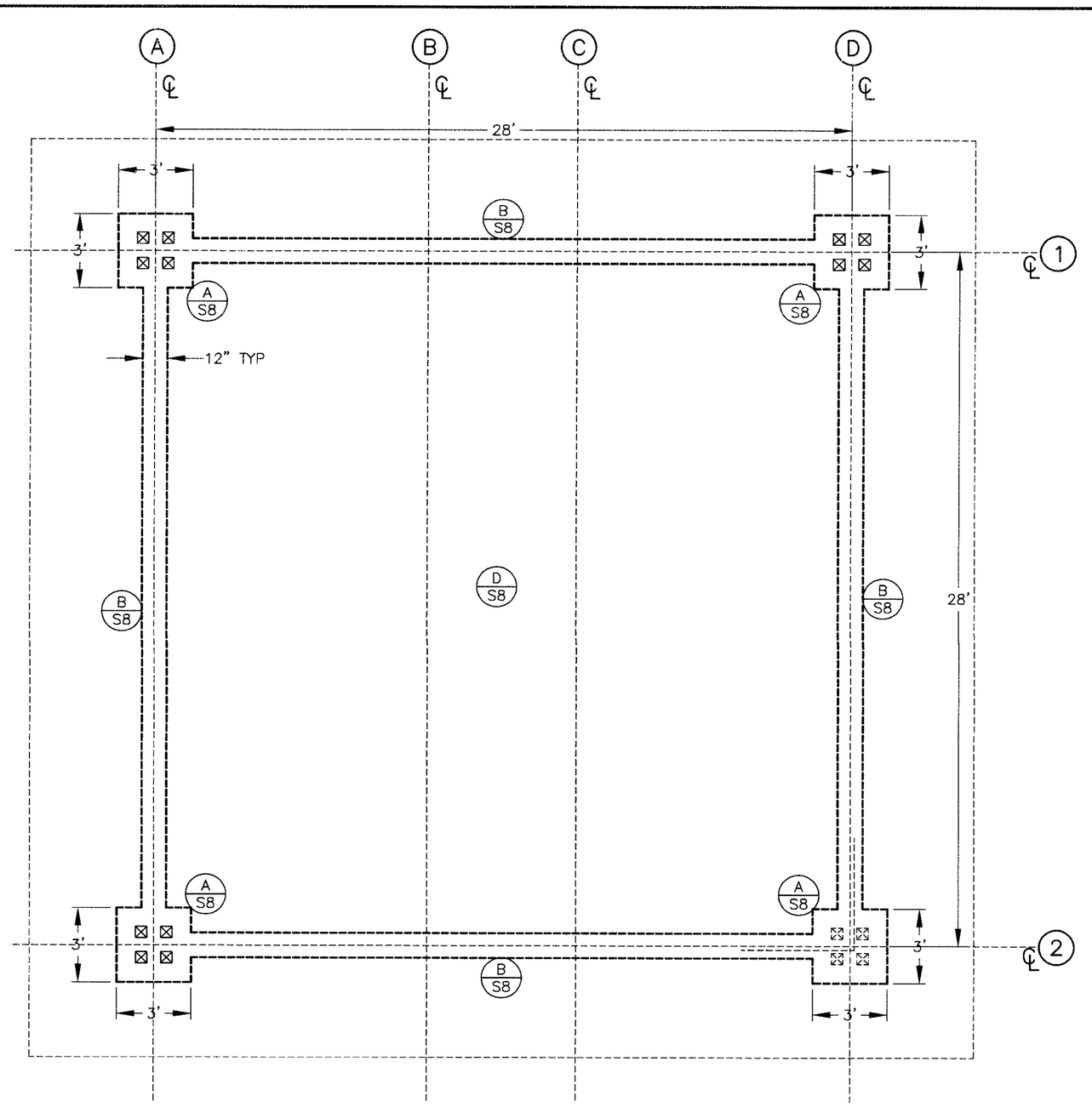

FOUNDATION PLAN
SCALE: 1/4" = 1'

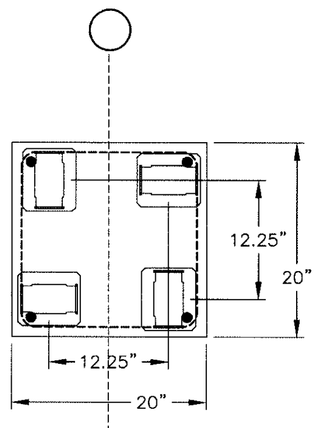

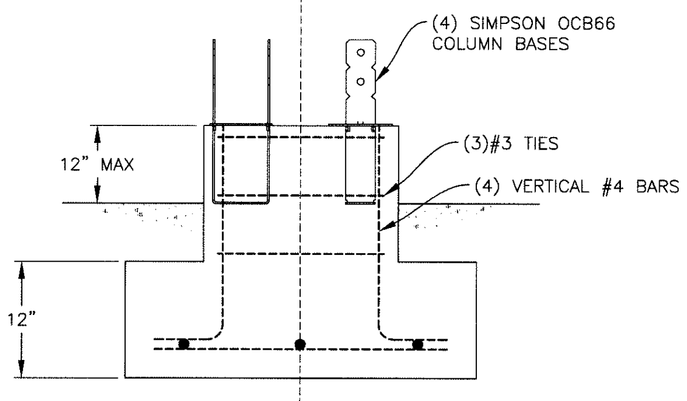

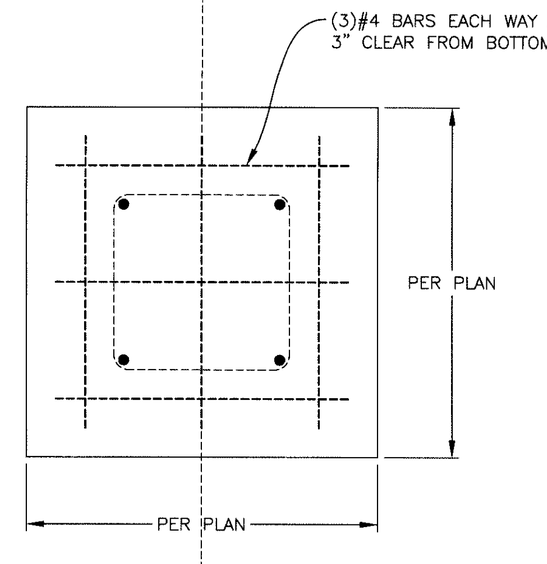

A FOOTING DETAIL
1"=1'

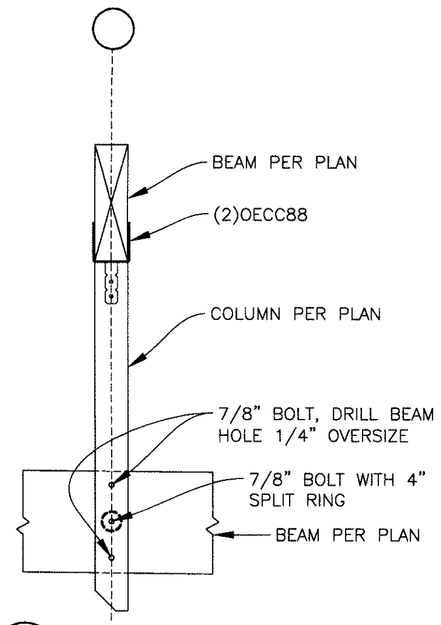

H BEAM TO COLUMN CONNECTION
1/2"=1'

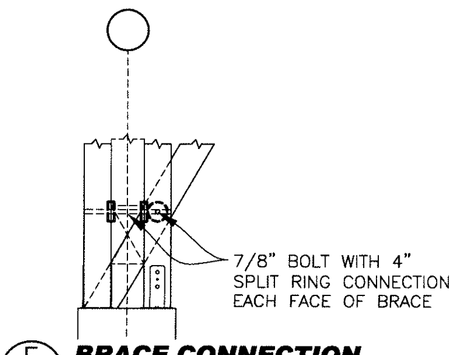

F BRACE CONNECTION
1/2"=1'

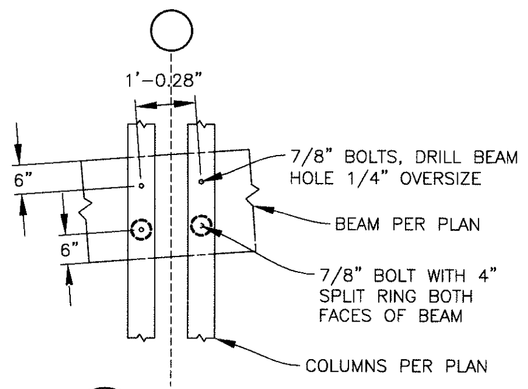

E BEAM TO COLUMN CONNECTION
1/2"=1'

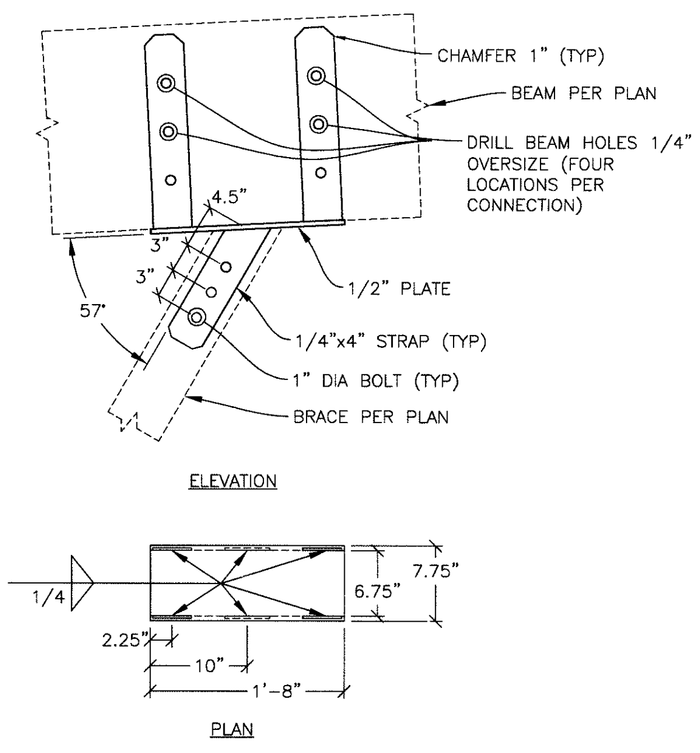

C BRACE CONNECTION DETAIL
1"=1'

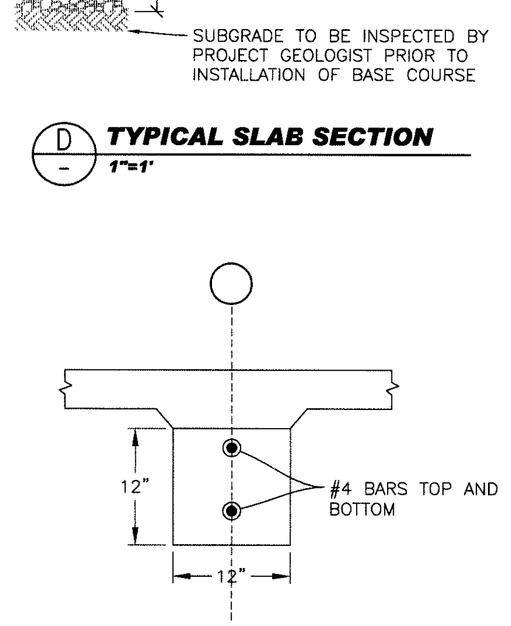

D TYPICAL SLAB SECTION
1"=1'

B GRADE BEAM DETAIL
1"=1'

LACO ASSOCIATES
CONSULTING ENGINEERS
21 W 4TH ST. EUREKA, CA 95501 (707)443-5054

NO.	REVISION	BY	CHK	DATE
5	BID ADDENDUM 1	TAM	NKT	6/27/11
4	100% SUBITTAL	TAM	NKT	5/24/11
3	PROGRESS SUBMITTAL #1	TAM	NKT	5/18/11
2	75% SUBMITTAL	TAM	NKT	4/15/11
1	DD SUBMITTAL	TAM	NKT	04/07/11

YUROK VETERANS CEMETERY
COMMITTAL SHELTER STRUCTURAL

YUROK TRIBE
BALDS HILL RD. HUMBOLDT CO.

SCALE	AS SHOWN
DRAWN	TAM
CHECK	NKT
APPVD	NKT
DATE	02/22/2011
JOB NO.	7105.03
SHEET	**S8**

Jun 26,2011-1:42pm
I:\cadfiles\7105\7105 YUROK VETERANS CEMETERY\DWG\ 7105-03 COMMITTAL SHELTER STRUCTURAL.dwg

REUSE OF DOCUMENTS: This document and the ideas and design incorporated herein, as an instrument of professional service, is the property of LACO Associates and shall not be reused in whole or part for any other project without LACO Associates written authorization.

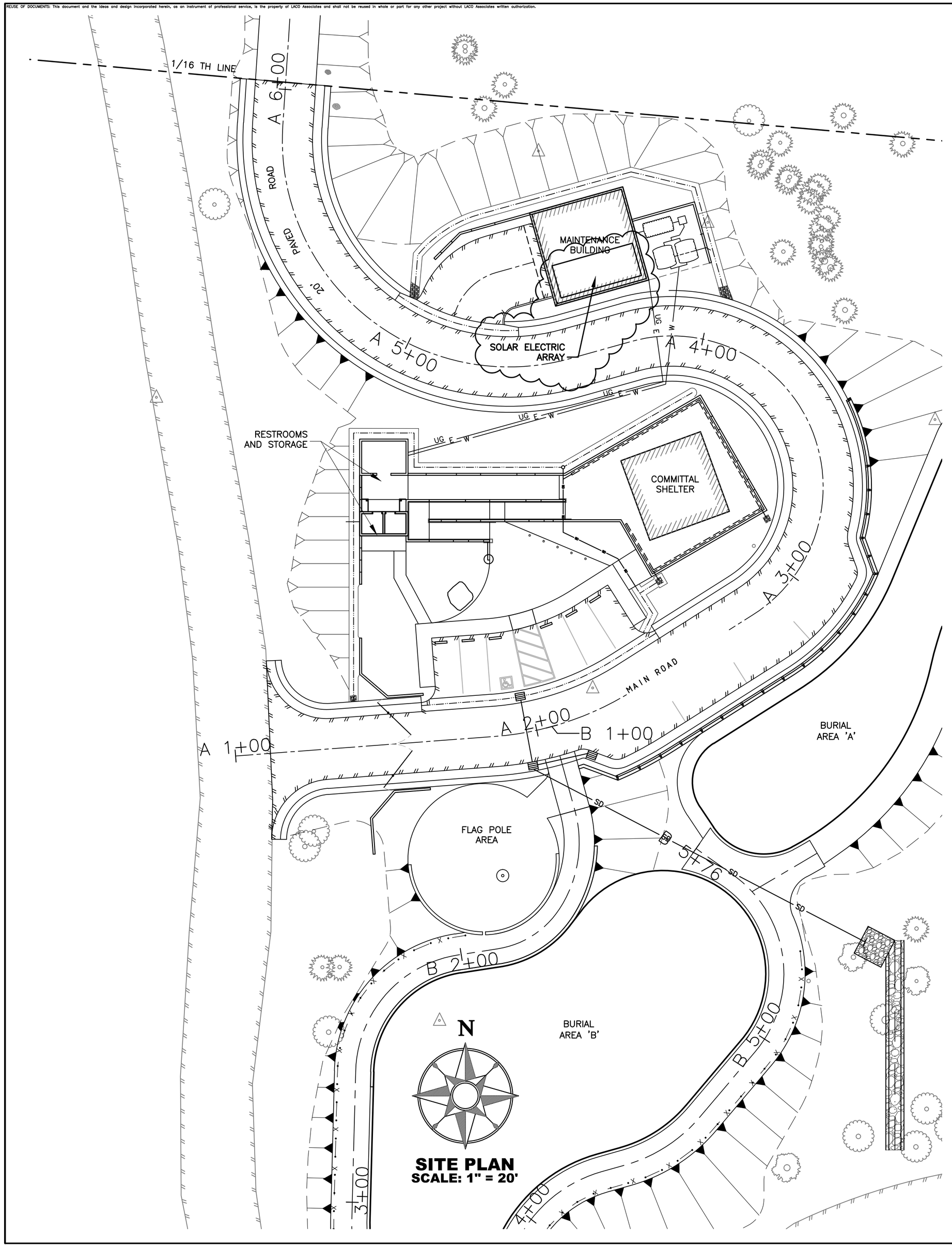

SITE PLAN
SCALE: 1" = 20'

PHOTOVOLTAIC POWER SYSTEM SHALL BE AS FOLLOWS, WITH SHOP DRAWINGS TO BE SUBMITTED TO THE OWNER FOR APPROVAL PRIOR TO ORDERING MATERIALS:

1. OUTBACK POWER SYSTEMS FP1–1 PREWIRED INVERTER SYSTEM OR EQUAL
2. 6KW DIESEL OR PROPANE BACKUP GENERATOR AS APPROVED BY OWNER, TIED TO POWER SYSTEM WITH AUTOMATIC TRANSFER SWITCH AND AUTOMATIC START/STOP IN ACCORDANCE WITH POWER SYSTEM MANUFACTURER'S RECOMMENDATIONS.
3. PANEL ARRAY SHALL BE MINIMUM 2.7KW, WITH 20 YEAR WARRANTY ON PANELS
4. BATTERY BANK SHALL BE COMPOSED OF AT LEAST 8 FLOODED LEAD–ACID L16 TYPE 350 AMP–HOUR BATTERIES.
5. PANEL MOUNTING SYSTEM SHALL BE UNIRACK FLUSH–MOUNT OR EQUAL
6. ALL SOLAR ELECTRIC WIRING SHALL BE IN COMPLIANCE WITH ARTICLE 690 OF THE CURRENT ELECTRICAL CODE.

1"
GRAPHIC SCALE MEASURES 1 INCH ON FULL-SIZE PLANS.

LACO ASSOCIATES
EUREKA · UKIAH · CONCORD
CONSULTING ENGINEERS
1-800-515-5054
www.LACOASSOCIATES.COM

NO.	REVISION	BY	CHK	DATE
	BID ADDENDUM 1	JDB	NKT	6/27/11
	100% SUBMITTAL	JDB	MAH	5/24/11
	PROGRESS SUBMITTAL #1	JDB	MAH	5/18/11
	75% SUBMITTAL	JDB	MAH	4/14/11
	DD SUBMITTAL	JDB	MAH	4/7/11

YUROK VETERANS CEMETERY
PHOTO VOLTAIC, MICRO HYDRO, GENERATOR AND POWER SYSTEMS

BALD HILLS ROAD, HUMBOLDT COUNTY, CA
APN:531-094-005

SCALE	AS SHOWN
DRAWN	JDB
CHECK	MAH
APPVD	MAH
DATE	4/7/11
JOB NO.	7105.03
SHEET	E1