Addendum Number 1
Date: September 7, 2016
Project: Yurok Tribe Klamath Tank
Owner: Yurok Tribe Planning and Community Development

This addendum provides changes and/or clarifications, to the Contract Documents. These modifications pertain to the sections referenced below and to all other referenced or applicable sections in the Contract Documents.

Please sign the addendum receipt acknowledgment form and return to the Owner with your cost proposal and other required forms and documents.

Changes and/or clarifications to the bidding and contracting documents are as follows:

CHANGE: Bid opening will be held Wednesday, September 14th 2016 @ 2:00 pm at the Yurok Tribe, 190 Klamath Blvd., Klamath, CA 95548

Clarification: Complete Bidding and Contracting Manuals can be viewed with the Humboldt Builder's Exchange. Manuals are also available for pickup from the Yurok Tribe Planning Department for $150.000. Contractors **do not** have to purchase the documents from the Yurok Tribe in order to bid on this project.

Clarification: See attached Questions and Answers

Clarification: If awarded, the Contractor is to file and pay fees for a Water Quality Permit. See attached Yurok Tribe Water Quality Application Instructions.

Clarification: Engineer Estimate $375,000

Clarification: Prevailing wage rates apply (Construction Type: Building CA5) Attached, Section 007343 Wage Rate Requirements, Attached

Clarification: Dump Site Location, Map Attached

Clarification: Existing Tank Plans, Plan Sheet Attached

Clarification: Revised Plan Sheets T01, C03, C06.0, & C08, Seen Attached Plan Set.

Addendum Receipt Acknowledgement Form

Receipt of Acknowledgement:

My firm received Addendum No. 1, consisting of **44** pages, for the Yurok Tribe Klamath Water Tank on September 14, 2016.

Name of Firm _____

Name (Print) _____

Name (Signature) _____

Date: _____

Questions / Answers
Yurok Tribe / Klamath Tank

Q) Can the 125,000 gallon bolted steel water storage tank have a factory applied powder epoxy coating?

A) Yes, provided the coating meets California drinking water standards and has the ability to be touched up in the field. **Per Section 221200 Water Tanks**

Q) Is the tank expected to have 125,000 gallons useable or be a 125,000 gallon tank?

A) Tank is to hold 125,000 gallons useable with additional freeboard as required.

Q) Are you ok with us using the Bolted specs as you can find at this link: http://superiortank.com/downloads/bolted-tank-specifications-final-11-5-15.docx.

A) No, Contractors are to bid project per bidding documents refer to **section 221200 Water Tanks.**

Q) We need to know the current max water height in the existing tank. Specs require we provide 125,000 useable. I will have to work backwards from height of existing overflow then decide on diameter.

A) Existing tank plans added for reference. Contractor to field verify all elevations.

Q) Are bidders required to purchase plans to bid project?

A) No, Bidders may use bidding packets download (bidders are responsible for confirming addendums)

Q) When are bids due?

A) September 14, 2016 2:00 PM at 190 Klamath Blvd, Klamath CA 95548

Q) Does 90 working days include alternate work?

A) Yes

Q) Is a Yurok Tribe Water Quality permit required?

A) Yes, See Attached (cost for permit $500.00)

Q) What wage rate is required for this project?

Questions / Answers
Yurok Tribe / Klamath Tank

A) See attached CA5 and section 007343 Wage Rate Requirements.

Q) Will the Yurok Tribe grant a limited sovereign immunity waiver for this project?

A) Yes, The Yurok Tribe will grant a limited sovereign immunity waver to the low bidder.

Q) Is there a designated dump site for the excavated material?

A) Yes, See attached map.

Yurok Tribe
Water Quality Certification and/or Waste Discharge Requirements (Dredge/Fill)
Application Instructions

The following information is necessary before the Yurok Tribe can grant Water Quality Certification or Waste Discharge Requirements. Your application should include the following clearly identified elements, along with appropriate documentation, with a check for $500. If the scope of the project is expected to be extensive (affect a broad area or span multiple years), additional assessment of fees may be required. The suggested items below are not exhaustive; additional information may be required for certain project, likewise some of the items below may not be applicable to smaller projects.

Yurok Tribe Environmental Program
Water Quality Certification Division
PO Box 1027
Klamath, CA 95548

1. APPLICANT
    a. Property Owner
    b. Owner's Representative
    c. Address (include city, state, and zip code)
    d. Other information (phone, fax, and email)

2. PROJECT INFORMATION
    a. Project Description and Purpose (see checklist for guidance)
    b. Project Location (include a topographic map and site map clearly identifying affected waters)
    c. Proposed Schedule for Project (start date, duration, estimated completion date, etc.)
    d. Federal Permit Application(s) and/or approved permit(s) required (i.e. Army Corps of Engineers 404 Permit). Also include whether permit is individual or nationwide. Include file, application, and/or permit number.
    e. Compliance with applicable Tribal regulations

3. AFFECTED WATERS
    a. Acres of water body affected by project (i.e. jurisdictional wetlands, riparian zone, streambed, and/or lake). Please list separately the permanent and temporary acres to be impacted (attach detailed map illustrating extent of impact).
    b. Name, title, and affiliation of person delineating Extent of Waters of U.S. (include wetland delineator certification information if applicable).
    c. Describe proposed measures to avoid or mitigate direct impacts to Waters of US: (if direct impacts are unavoidable, describe efforts to minimize or mitigate impacts. See Mitigation Checklists for guidance)
    d. Type and volume of proposed discharge (i.e. dredged or fill material)
    e. Describe proposed measures to avoid or mitigate indirect impacts to Waters of the State: (i.e. upland impacts which might affect water quality. See Mitigation Checklists for guidance).
    f. Cumulative Impacts: Brief list/description of applicant's previous and future projects related to the proposed activity or that may impact the same receiving water body/bodies.
    g. Nearest Receiving Water(s) (or surface drainage)
    h. Proposed Minimum Erosion Control Measures

4. SIGNATURES
    a. Signature or Owner, Owner's Representative or agency representative
    b. Date

Project Plan Checklist

A detailed project plan is required with every application. Clarification of information may be requested by the Yurok Tribe Environmental Program staff during application review. This checklist is provided to aid applicants in providing a thorough project plan. Not all items on this checklist may apply to each project; rather they are provided here as general guidance for required information to be included. In addition, there may be items not covered by this checklist which may be requested on a project-by-project basis.

1. PROJECT DESCRIPTION
    a. Project Description
    b. Summary of overall project area
        i. Size and description of project area; type(s) of receiving water body/bodies; brief list/description of applicant's previous and future projects related to the proposed activity or that may impact the same receiving water body/bodies.
    c. Responsible Parties
        i. Names and phone numbers of anyone participating in the project.
    d. Jurisdictional waters to be impacted
        i. Include a detailed site plan clearly indicating the proposed impacts and mitigation site areas, including acreage.
    e. Type(s) of water body/bodies, flow duration (intermittent or perennial), inundation period, functions, and values.
    f. Location and size of project area.
    g. Site map and regional map of project location.
    h. Species present within project site and/or upstream/downstream areas.
    i. Threatened or endangered species present within stream course.
    j. Existing functions and values
        i. Wetted channel width, pool/riffle ration, mean/max depths, complexity, shade/cover, etc.
    k. Current conditions at site
        i. "mostly natural," "degraded," "heavily impacted"
    l. Construction methods to be used
    m. Adverse impacts
        i. Include whether the adverse impacts will be temporary or permanent, and include the amount of area to be affected (acres or linear feet)
    n. Schedule of construction activities
        i. Include start and end dates for proposed activities
    o. Stockpile summary
        i. Include amount of stockpile and proposed areas for storage
    p. Best Management Practices
        i. Practices to be implemented to reduce potential water quality impacts during and after construction activities, aside from proposed mitigation activities
    q. Site dewatering
    r. Solid waste disposal for dredged material
    s. Mitigation and monitoring plans
        i. Refer to separate checklists for Stream course Mitigation, and for Wetland Mitigation

Stream course Mitigation Checklist

If it is determined that a watercourse (intermittent or perennial) will be affected by the proposed development, mitigation will likely be necessary to preserve the function and beneficial uses of the site. Clarification of information may be requested by Yurok Tribe Environmental Program staff during application review. This checklist is intended to aid applicants in submitting complete and proper information regarding mitigation plans, to enable staff to effectively evaluate the project for Water Quality Certification or Waste Discharge Requirements. Not all items on this checklist may apply to each project; rather they are provided here as general guidance for required information to be included. In addition, there may be items not covered by this checklist which may be requested on a project-by-project basis.

1. GOALS OF MITIGATION
    a. Variety of habitats to be created/restored
        i. Pools, rearing sites, spawning sites, riparian habitat, etc.
    b. Functions and values of habitat to be created
        i. Wetted channel width, pool/riffle ratio, mean/max depths, complexity, shade/cover, large woody debris recruitment, etc.
    c. Other mitigation steps taken
        i. Avoid, minimize, compensate
    d. Functions and values of the created/restored habitat
        i. Wildlife habitat, stream bank stabilization through riparian habitat establishment, increased water quality, etc.
    e. Time schedule for mitigation
    f. Work plan
        i. Project start date, length mitigation activities will take place, specific work (riparian plantings, etc.) to be done at particular times, area of stream-channel profile receiving mitigation (i.e. wetted channel, bankfull channel, floodplain)

2. PROPOSED MITIGATION SITE
    a. Location and size of mitigation area
    b. Site map and regional map of mitigation project
    c. Existing functions and values
        i. Wetted channel width, pool/riffle ratio, mean/max depths, complexity, shade/cover, large woody debris recruitment, etc.
    d. Current conditions at the site
        i. "mostly natural," "degraded," "heavily impacted"
    e. If the site is degraded, explain past uses leading to degradation
    f. Proposed uses for mitigation area
        i. Provide habitat for flora/fauna, recreation, open space, etc.
    g. Current uses of the area
        i. Agriculture, development, recreation, open space, etc.

3. IMPLEMENTATION PLAN
    a. Responsible parties
    b. Rationale for expecting success
    c. Site preparation plan
    d. Planting plan
        i. Dates of proposed plantings, native species to be planted, density of plantings, etc.
    e. Irrigation plan (if applicable)

4. MAINTENANCE DURING MONITORING PERIOD
    a. Responsible parties
    b. Maintenance activities
    c. Names and phone numbers of anyone performing maintenance activities at or near the site
    d. Schedule

5. MONITORING PLAN
    a. Responsible parties
    b. Names and phone numbers of individuals/contractors performing monitoring duties
    c. Performance criteria
        i. Wetted channel width, pool/riffle ratio, mean/max depths, complexity, shade/cover, large woody debris recruitment, riparian establishment, flora/fauna, etc.
    d. How will success be judged?
        i. Increase in depths, decreased erosion rates, establishment of riparian species, recruitment of flora/fauna, increased pool/riffle ratio, increased shade, decreased water temperatures, increased water quality, etc.
    e. Is there a reference site?
        i. If a reference site is incorporated into the plan, include where it is located and what the current conditions are (see performance criteria above)
    f. Monitoring methods
    g. Describe in detail how the site will be monitored
    h. Reports
    i. How often will be monitoring reports be published?
    j. Schedule
    k. How often will be site be monitored?
    l. How long will be site be monitored?

6. COMPLETION OF MITIGATION
    a. Notice of completion
        i. Plan for notification of completion (i.e. agencies to be contacted)
    b. YTEP confirmation

7. FINAL SUCCESS CRITERIA
    a. Target functions and values achieved
        i. Ultimate target functions and values of the mitigation (i.e. wetted channel width, pool/riffle ratio, complexity/cover, flora/fauna recruitment, etc.)
    b. Target hydrologic scheme achieved
        i. Wetted width, bankfull width, mean/max depths, flow regime, etc.
    c. What are the ultimate hydrologic conditions for the site?
        i. Based on conditions prior to any degradation or human impacts (best case scenario)
    d. Target jurisdictional acreage created/restored
    e. Total acres restored or created through mitigation project
    f. Establishment of native riparian species
        i. Based on monitoring, reviewed after a predetermined number of years

Wetland Mitigation Checklist

Wetlands should not be disturbed at all. If it is determined that a wetland will be affected by the proposed action, mitigation will need to be done on at least a 1:1 ratio to preserve the function and values of the wetland and its associated beneficial uses. Clarification of information may be requested by Yurok Tribe Environmental Program staff during application review. This checklist is intended to aid applicants in submitting complete and proper information regarding mitigation plans, to enable staff to effectively evaluate the project for Water Quality Certification or Waste Discharge Requirements. Not all items on this checklist may apply to each project; rather they are provided here as general guidance for required information to be included. In addition, there may be items not covered by this checklist which may be requested on a project-by-project basis.

1. GOALS OF MITIGATION
    a. Variety of habitats to be created/restored
        i. What type of wetland will be created/restored? (i.e. seasonal, freshwater, saltwater, swale, vernal pool, etc.)
    b. Functions and values of habitat to be created
        i. What are the functions and values of the created/restored wetland? (i.e. wildlife habitat, native plant communities, increased water quality, etc.)
    c. Other mitigation steps taken
        i. Avoid, minimize, compensate
    d. Time schedule for mitigation
    e. Work plan
        i. Project start date, length mitigation activities will take place, specific work (exotic species removal, native species plantings, etc.) to be done at particular times

2. PROPOSED MITIGATION SITE
    a. Location and size of mitigation area
    b. Site map and regional map of mitigation project
    c. Existing functions and values
        i. Flora/fauna habitat, flora/fauna utilizing site, mean/max depths, water quality parameters. Include a copy of delineation report of mitigation site.
    d. Current conditions at the site
        i. "mostly natural," "degraded," "heavily impacted"
    e. If the site is degraded, explain past uses leading to degradation
    f. Proposed uses for mitigation area
        i. Provide habitat for flora/fauna, recreation, open space, etc.
    g. Current uses of the area
        i. Agriculture, development, recreation, open space, etc.

3. IMPLEMENTATION PLAN
    a. Responsible parties
    b. Rationale for expecting success
    c. Site preparation plan
    d. Planting plan
        i. Dates of proposed plantings, native species to be planted, density of plantings, etc.
    e. Irrigation plan (if applicable)

4. MAINTENANCE DURING MONITORING PERIOD
    a. Responsible parties
    b. Maintenance activities
    c. Names and phone numbers of anyone performing maintenance activities at or near the site
    d. Schedule

5. MONITORING PLAN
    a. Responsible parties
    b. Names and phone numbers of individuals/contractors performing monitoring duties
    c. Performance criteria
        i. Native species present, duration and season of water inundation, mean/max depths, water quality, etc.
    d. How will success be judged?
        i. Establishment of native flora/fauna, ponding of water during appropriate portion of season, increased water quality, etc.
    e. Is there a reference site?
        i. If a reference site is incorporated into the plan, include where it is located and what the current conditions are (see performance criteria above)
    f. Monitoring methods
    g. Describe in detail how the site will be monitored
    h. Reports
    i. How often will be monitoring reports be published?
    j. Schedule
    k. How often will be site be monitored?
    l. How long will be site be monitored?

6. COMPLETION OF MITIGATION
    a. Notice of completion
        i. Plan for notification of completion (i.e. agencies to be contacted)
    b. YTEP confirmation

7. FINAL SUCCESS CRITERIA
    a. Target functions and values achieved
        i. Ultimate target functions and values of the mitigation (i.e. native flora/fauna recruitment, inundation of water during appropriate season, etc.)
    b. Target hydrologic scheme
        i. Inundation period of area
    c. What are the ultimate hydrologic conditions for the site?
        i. Based on conditions prior to any degradation or human impacts (best case scenario)
    d. Target jurisdictional acreage created/restored
    e. Total acres restored or created through mitigation project
    f. Establishment of native wetland species
        i. Based on monitoring, reviewed after a predetermined number of years

General Decision Number: CA160005 01/08/2016 CA5

Superseded General Decision Number: CA20150005

State: California

Construction Type: Building

Counties: Del Norte, Humboldt, Lake and Mendocino Counties in California.

BUILDING CONSTRUCTION PROJECTS (does not include residential construction consisting of single family homes and apartments up to and including 4 stories)

Note: Under Executive Order (EO) 13658, an hourly minimum wage of $10.15 for calendar year 2016 applies to all contracts subject to the Davis-Bacon Act for which the solicitation was issued on or after January 1, 2015. If this contract is covered by the EO, the contractor must pay all workers in any classification listed on this wage determination at least $10.15 (or the applicable wage rate listed on this wage determination, if it is higher) for all hours spent performing on the contract in calendar year 2016. The EO minimum wage rate will be adjusted annually. Additional information on contractor requirements and worker protections under the EO is available at www.dol.gov/whd/govcontracts.

Modification Number	Publication Date
0	01/08/2016

SUCA1986-001 06/01/1986

	Rates	Fringes
Boilermaker	$ 21.60	4.25
Brick Tender	$ 18.54	3.86
Bricklayer, Stonemason	$ 22.45	8.60
Carpenters:		
Carpenter	$ 19.08	6.915
Hardwood floor layer; Power saw operator; Saw filer; Shingler; Steel scaffold erector; Steel shoring	$ 19.23	6.955
Millwright	$ 19.73	8.205
Piledriverman - bridge building	$ 21.21	6.915
Piledriverman	$ 19.38	9.885
Cement Masons:		
Cement mason	$ 17.91	6.18
Swing or slip form scaffold; Mastic, magnesite, gypsum, epoxy, polyester, resin & all		

composition	$ 18.16	6.18
Diver		
Diver tender	$ 20.38	6.165
Diver	$ 31.63	9.885
Drywall Installers/Lathers:		
Drywall installer/lather	$ 19.08	7.405
Drywall stocker, scrapper & clean-up	$ 9.54	7.405
Electricians:		
Cable Splicer	$ 18.80	3%+5.53
Communications & System electronic installer: Communications & systems technician (including any data system whose only function is to transmit or receive information excluding all other data systems or multiple systems which include control function or power supply (inclusion or exclusion of terminations and testings of conductors determined by their function); excluding fire alarm work when installed in raceways (including wire and cable pulling) and when performed on new or major remodel building projects or jobs; excluding installation of raceway systems, line voltage work, industrial work, life-safety systems (all buildings having floors located more than 75' above the lowest floor level having building access); excluding energy management systems	$ 13.62	3%+0.90
Electrician	$ 17.41	3%+5.53
Elevator Mechanic	$ 31.06	3.87+a
Glazier	$ 16.31	11%+4.40
Insulator/asbestos worker Includes the application of all insulating materials, protective coverings, coatings, and finishes to all types of mechanical systems	$ 21.60	5.61
Ironworkers:		
Fence erector	$ 18.26	8.93
Ornamental, Reinforcing, & Structural	$ 19.15	8.93
Laborer: Gunite		

GROUP 1.....$ 17.07 5.96
GROUP 2.....$ 16.48 5.96
GROUP 3.....$ 17.36 5.96
Laborer: Wrecking, buildings
and miscellaneous structures
GROUP 1.....$ 16.61 5.96
GROUP 2.....$ 16.46 5.96
GROUP 3.....$ 16.36 5.96
Laborers: (*See GROUP 1-b &
GROUP 1-g under the
descriptions of groups.)
GROUP 1.....$ 16.61 5.96
GROUP 1-a.....$ 16.83 5.96
GROUP 1-c.....$ 16.66 5.96
GROUP 1-d.....$ 16.86 5.96
GROUP 1-e.....$ 17.16 5.96
GROUP 1-f.....$ 17.19 5.96
GROUP 2.....$ 16.46 5.96
GROUP 3.....$ 16.36 5.96
GROUP 4.....$ 10.05 5.96
Landscape Laborer
GARDENERS, HORTICULTURAL &
LANDSCAPE LABORERS:
Establishment warranty
period.....$ 10.05 5.96
New construction.....$ 16.36 5.96
Line Construction
DEL NORTE COUNTY: ZONE
1:
GROUP 1.....$ 20.63 3.5%+3.25
GROUP 2.....$ 18.65 3.5%+3.25
GROUP 3.....$ 15.35 3.5%+3.25
GROUP 4.....$ 16.08 3.5%+3.25
GROUP 5.....$ 14.07 3.5%+3.25
GROUP 6.....$ 14.07 3.5%+3.25
GROUP 7.....$ 13.23 3.5%+3.25
HUMBOLDT COUNTY:
Cable splicer.....$ 18.80 4%+5.33
Ground person.....$ 13.93 4%+5.33
Heavy equipment operator...$ 15.67 4%+5.33
Line technician.....$ 17.41 4%+5.33
LAKE AND MENDICINO COUNTIES:
Cable splicer.....$ 25.14 3%+4.74
Ground person.....$ 18.28 3%+4.74
Heavy equipment operator...$ 18.22 3%+4.74
Line technician.....$ 22.85 3%+4.74
ZONE DIFFERENTIAL:
Add to Zone 1 Base rate: ZONE 2 - $2.40
ZONE 3 - $3.15
ZONE 4 - $3.90
ZONE 5 - $5.15
Marble and terrazzo setter.....$ 21.09 4.13
Marble Finisher
Del Norte County.....$ 13.92 3.67
Humboldt, Lake & Mendocino
Counties.....$ 15.22 3.92
Painters:

Del Norte and Humboldt
Counties:
Brush; roller.....$ 12.51 2.43
Paperhanger; Sandblaster;
Spray; Structural
steel; Swing stage; Taper..$ 12.76 2.43
Lake and Mendocino Counties:
Brush.....$ 20.78 4.68
Drywall Finisher;
Paperhanger.....$ 21.78 4.68
Sandblasting; Spray;
Steam- cleaning.....$ 21.28 4.68
Parking Lot Striping/Highway
Marking:
GROUP 1.....$ 16.83 3.52
GROUP 2.....$ 15.99 3.52
GROUP 3.....$ 14.31 3.52
GROUP 4.....$ 16.83 3.52
Slurry seal work:
Operator & Shuttle.....$ 12.88 3.52
Sealer/mixer.....$ 14.54 3.52
Plasterer.....$ 17.73 8.22
Plumber and Steamfitter
Del Norte & Humboldt
Counties.....$ 16.47 9.45
Lake & Mendocino Counties...$ 29.84 12.53
Power equipment operators:
(AREA 2: $2.00 Premium of
Area 1)
AREA 1:
GROUP 1.....$ 24.17 9.70
GROUP 2.....$ 23.04 9.70
GROUP 3.....$ 21.96 9.70
GROUP 4.....$ 20.93 9.70
GROUP 5.....$ 19.97 9.70
GROUP 6.....$ 18.99 9.70
GROUP 7.....$ 18.15 9.70
GROUP 8.....$ 17.31 9.70
Roofers:
Del Norte
Enameler & Pitch.....$ 18.30 3.84
Roofer.....$ 16.30 3.84
Humboldt County.....$ 12.00 2.00
Lake & Mendocino Counties
Bitumastic; Coal tar
Built-up; Enameler;
Pipewrapper.....$ 19.65 7.17
Mastic worker; Kettle
tender (2 kettles without
pumps).....$ 17.90 7.17
Roofer.....$ 17.65 7.17
Sheet Metal Worker
Del Norte & Humboldt
Counties.....$ 18.65 4.85
Lake & Mendocino Counties...$ 27.17 7.17
Soft Floor Layer
Del Norte & Humboldt.....$ 14.19 8%+3.27

Lake & Mendocino	$ 18.73	b
Sprinkler Fitter	$ 24.18	3.75
Terrazzo Finisher		
Del Norte County		
Base Machine Operator	$ 17.42	3.95
Terrazzo Finisher	$ 16.72	3.95
Humboldt, Lake, Mendocino		
Base Machine Operator	$ 17.69	4.18
Terrazzo Finisher	$ 16.99	4.18
Tile Finisher	$ 16.17	10%+3.36
Tile Setter	$ 23.35	4.48
Truck drivers:		
GROUP 1	$ 17.80	7.69
GROUP 2	$ 17.88	7.69
GROUP 3	$ 17.90	7.69
GROUP 4	$ 17.91	7.69
GROUP 5	$ 17.92	7.69
GROUP 6	$ 17.93	7.69
GROUP 7	$ 17.95	7.69
GROUP 8	$ 17.97	7.69
GROUP 9	$ 17.98	7.69
GROUP 10	$ 18.00	7.69
GROUP 11	$ 18.01	7.69
GROUP 12	$ 18.05	7.69
GROUP 13	$ 18.06	7.69
GROUP 14	$ 18.07	7.69
GROUP 15	$ 18.10	7.69
GROUP 16	$ 18.11	7.69
GROUP 17	$ 18.12	7.69
GROUP 18	$ 18.14	7.69
GROUP 19	$ 18.15	7.69
GROUP 20	$ 18.16	7.69
GROUP 21	$ 18.21	7.69
GROUP 22	$ 18.24	7.69
GROUP 23	$ 18.25	7.69
GROUP 24	$ 18.34	7.69
GROUP 25	$ 18.35	7.69
GROUP 26	$ 18.38	7.69
GROUP 27	$ 18.40	7.69
GROUP 28	$ 18.44	7.69
GROUP 29	$ 18.45	7.69
GROUP 30	$ 18.47	7.69
GROUP 31	$ 18.48	7.69
GROUP 32	$ 18.54	7.69
GROUP 33	$ 18.69	7.69
GROUP 34	$ 18.79	7.69
GROUP 35	$ 18.84	7.69
GROUP 36	$ 18.99	7.69
GROUP 37	$ 19.14	7.69

FOOTNOTES:

a. Vacation Pay: 8% with 5 or more years of service, 6% for 6 months to 5 years service. Paid Holidays: New Years Day, Memorial Day, Independence Day, Labor Day, Thanksgiving Day and Friday after, and Christmas Day.

b. $7.47 for employees who have worked less than 5 years;

$7.62 for employees who have worked 5 years or more.

POWER EQUIPMENT OPERATORS:
AREA DESCRIPTIONS

DEL NORTE COUNTY:
AREA 1: All of Del Norte County lying within Township 13N, Range 1E of the Humboldt Meridian.
AREA 2: Remainder of county.

HUMBOLDT COUNTY: AREA 1: All of Humboldt County within the following lines: Beginning at the point of intersection of the Pacific Ocean with the northerly line of Township 12 North, Thence easterly to the northeast corner of Township 12N, Range 1E, Thence southerly to the northwest corner of Township 9N, Range 2E, Thence easterly to the northeast corner of Township 9N, Range 3E, Thence southerly to the northwest corner of Township 7N, Range 4E, Thence easterly to the northeast corner of Township 7N, Range 5E, Thence southerly to the southeast corner of Township 6N, Range 5E, Thence westerly to the northeast corner of Township 5N, Range 3E, Thence southerly to the northeast corner of Township 4S, Range 3E,Thence easterly to the northeast corner of Township 4S, Range 4E, Thence southerly to the intersection of the easterly line of Township 5S, Range 4E, with the southerly line of Humboldt County, Thence westerly along said county line to the westerly line of Township 5S, Range 3E, Thence northerly and leaving said county line to the southeast corner of Township 2S, Range 2E, Thence westerly to the southwest corner of Township 2S, Range 2E, Thence northerly to the southeast corner of Township 1N, Range 1E, Thence westerly along the southerly line of Township 1N to the intersection of the Pacific Ocean, Thence northerly along the Pacific Ocean to the point of beginning.
AREA 2: Remainder of county.

LAKE COUNTY:
AREA 1: Southern 2/3,
AREA 2: Northern 1/3.

MENDOCINO COUNTY:
AREA 1: Southeastern part.
AREA 2: Remainder of County.

AREA & ZONE DESCRIPTIONS:
LINE CONSTRUCTION -

DEL NORTE COUNTY ZONES :

ZONE 1: 0-3 miles radius from the geographical center of Alturos and Yreka, California
ZONE 2: 3-20 miles radius
ZONE 3: 20-35 miles radius
ZONE 4: 35-50 miles radius
ZONE 5: over 50 miles radius Base rate (Zone 1) is paid when working out of employer's permanent shop.

LABORER CLASSIFICATIONS

GROUP 1: Asphalt ironer and raker; Asphalt spreader boxes (all types); Barko, Wacker and similar type tampers; Buggymobile; Chainsaw, Faller, Logloader and Bucker; Compactors of all types; Concrete and magnesite mixer, 1/2 yd. and under; Concrete pan work; Concrete saw; Concrete sander; Cribber and/or shoring; Cut granite curb setter; Form raiser; Slip form; Green cutter, Headerboard, Hubsetter, Aligner; Jackhammer operator; Jacking of pipe over 12 inches; Jackson and similar type compactors; Kettle tender, pot and worker applying asphalt, lay-kold, creosote, lime, caustic and similar type materials; Lagging, sheeting, whaling, bracing, trenchjacking, handguided lagging hammer; Magnesite, epoxyresin, fiberglass; Mastic worker (wet or dry); Perma Curbs; Precast-manhole setter; Cast-in-place manhole form setter; Pressure pipe tester; Pavement breaker and spader, including tool grinder; Pipelayer, caulker, bander, pipewrapper, conduit layer, plastic pipelayer; Post hole digger, air, gas and electric; Power broom sweeper; Power tamper of all types (except as shown in Group 2); Ram set gun and stud gun; Riprap stonepaver and rockslinger, including placing of sacked concrete and/or sand (wet or dry); Rotary scarifier, multiple head concrete chipper; Davis Trencher, 300 or similar type (and all small trenchers); Roto and Ditch Witch; Roto-tiller; Sandblaster, pot, gun, nozzle operator; Signalling and rigging; Tank cleaner; Tree climber; Vibrascreed, bull float in connection with laborers' work; Vibrator; Dri-pak-it machine; High pressure blow pipe (1-1/2" or over, 100 lbs. pressure and over); Hydro seeder and similar type; Certified asbestos laborer; Masonry and plasterer tender

GROUP 1-a: Joy drill model TWM-2A; Gardner-Denver model DH143 and similar type drills; Track driller; Jack leg driller; Diamond driller; Wagon driller; Mechanical drillers, all types regardless of type or method of power; Multiple unit drill; Blaster and powder; All work of loading, placing and blasting of all powder and explosives of whatever type regardless of method used for such loading and placing; High scaler (including drilling of same); Tree topper; Bit grinder

GROUP 1-b: Sewer cleaner receives an additional $4.00 per day, $5.00 per day on recently active large diameter sewers or sewer manholes

GROUP 1-c: Burning and welding in connection with laborers' work

GROUP 1-d: Repair track and road beds (cut and cover work of subway after the temporary cover has been placed)

GROUP 1-e: Laborer on general construction work on or in Bell Hole footings and shaft

GROUP 1-f: Wire winding machine in connection with guniting or shotcrete - aligner

GROUP 1-g: Laborer working off or with or from bos'n chairs, swinging scaffolds, belts, shall receive $ .25 per hour above the applicable wage rate. This premium rate shall be reckoned by the day and half day. This shall not apply to a laborer entitled to receive the wage rate set forth in Group 1-a.

GROUP 2: Asphalt shoveler; Cement dumper and handling dry cement or gypsum; Choke-setter and digger (clearing work); Concrete bucket dumper and chute; Concrete chipping and grinding; Concrete laborer (wet or dry); Chuck tender; High pressure nozzle operator, adductor; Grout-crew; Hydraulic monitor (over 100 lbs. pressure); Loading and unloading, carrying and hauling of all rods and materials for use in reinforcing concrete construction; Pittsburgh chipper and similar type brush shredders; Sloper; Singlefoot, hand-held, pneumatic tamper; All pneumatic, air, gas and electric tools not listed in Groups 1 through 1-f; Jacking of pipe under 12 inches

GROUP 3: All clean-up work of debris, grounds and buildings including but not limited to street cleaners; Cleaning and washing windows; Construction laborer including bridge and general laborer; Dump; Load spotter; Fire watcher; Street cleaner; Gardener, Horticultural and landscape laborer; Jetting; Limber; Brush loader; Piler; Maintenance, repair track and road beds; Streetcar and railroad construction track laborer; Temporary air and water lines, Victaulic or similar; Fence erector; Guardrail erector; Pavement marker (button setter)

GROUP 4: Brick cleaner (jobsite only); Lumber cleaner (jobsite only); (not applicable to "form stripping", cleaning and oiling and moving to the next point of erection)

GUNITE CLASSIFICATIONS

GROUP 1: Nozzle operator (including gun, pot); Ground

GROUP 2: Rebound

GROUP 3: General laborer

WRECKING WORK CLASSIFICATIONS

GROUP 1: Skilled wrecker (removing and salvaging of sash, windows, doors, plumbing and electric fixtures)

GROUP 2: Semi-skilled wrecker (salvaging of other building materials)

GROUP 3: General laborer (includes all clean-up work, loading lumber, loading and burning of debris)

LINE CONSTRUCTION CLASSIFICATIONS Del Norte County:

GROUP 1: Cable splicer, lead pole sprayer GROUP 2: Line technician, pole sprayer, heavy line equipment Operator, certified line welder

GROUP 3: Tree trimmer

GROUP 4: Line equipment operator

GROUP 5: Head ground person, powder, jackhammer operator

GROUP 6: Head ground person (chipper) GROUP 7: Ground person

Groups 3 and 6 receive base rate (Zone 1) only (no zone differential).

PARKING LOT STRIPING WORK AND/OR HIGHWAY MARKING

GROUP 1: STRIPER: Layout and application of painted traffic stripes and markings; hot thermo plastic; tape traffic stripes and markings

GROUP 2: TRAFFIC DELINEATING DEVICE APPLICATOR: Layout and application of pavement markers, delineating signs, rumble and traffic bars, adhesives, guide markers; other traffic delineating devices; includes all related surface preparation (sandblasting, waterblasting, grinding) as part of the application process

GROUP 3: SURFACE ABRASIVE BLASTER: removal of traffic lines and markings, preparation of surface for coatings

GROUP 4: TRAFFIC PROTECTIVE DELINEATING SYSTEMS INSTALLER: removes; relocates; installs permanently affixed roadside and parking delineation barricades; fencing, guard rail; cable anchor, retaining walls, reference signs, monument markers

---

POWER EQUIPMENT OPERATOR CLASSIFICATIONS

GROUP 1: Operator of helicopter (when used in erection work); Power shovel, backhoe, gradall over 7 cu. yds.

GROUP 2: Highline cableway; Power blade operator (finish); Power shovel, backhoe, gradall (over 1 cu. yd. and up to and including 7 cu. yds. m.r.c.)

GROUP 3: Asphalt milling machine; Hydraulic excavator; Cable backhoe; Combination backhoe and loader over 3/4 cu. yds.; Continuous flight tie back machine; Crane-mounted continuous flight tie back machine; Crane-mounted drill attachment; Dozer, slope brd; Gradall; Loader, 4 cu. yds.

and over; Multiple-engine scraper (when used as push pull); Power shovel, backhoe, gradall up to and including 1 cu. yd.); Pre-stress wire wrapping machine; Side boom Cat, 771 or larger; Track loader, 4 cu. yds. and over; Wheel excavator (up to and including 750 cu. yds. per hour)

GROUP 4: Asphalt plant engineer; Automatic concrete slip form paver; Chicago boom; Combination backhoe and loader up to and including 3/4 cu. yds.; Concrete batch plant (wet or dry); Dozer and/or push cat; Pull-type elevating loader; Gradesetter, grade checker (mechanical or otherwise); Grooving and grinding machine; Heading shield operator; Heavy-duty drilling equipment, Huges, LDH, Watson 3000 or similar; Heavy-duty repair person; Lime spreader; Loader, under 4 cu. yds.; Lubrication and service engineer (mobile and grease rack); Mechanical finisher or spreader machine (asphalt, Barber-Greene and similar); Miller Formless M-9000 slope paver or similar; Mucking machine (rubber-tired, rail or track type); Portable crushing and screening plant; Power blade support; Raised bore operator (tunnels); Roller operator, asphalt; Rubber-tired earth-moving equipment (scraper); Slip form paver (concrete or asphalt); Small tractor with drag; Soil stabilizer (P & H or equal); Timber skidder; Track loader, up to 4 yds.; Tractor-drawn scraper; Tractor, compressor drill combination; Tunnel mole bore operator; Woods- mixer (and other similar Pugmill)

GROUP 5: Cast-in-place pipe laying machine; Combination slusher and motor operator; Concrete conveyor or concrete pump, truck or equipment mounted); Concrete conveyor, building site; Concrete pump or pumpcrete gun; Drilling equipment, Watson 2000, Texoma 700 or similar; Drilling and boring machinery, horizontal (not applicable to waterliners, wagon drills or jackhammers); Concrete mixer/all; Person and/or material hoist; Mechanical finisher (concrete) (Clary, Johnson, Bidwell bridge deck or similar types); Mechanical burm, curb and/or curb and gutter machine, concrete or asphalt; Mine or shaft hoist; Portable crusher; Power jumbo operator (setting slip-forms, etc., in tunnels); Screed (automatic or manual); Self-propelled compactor with dozer; Tractor with boom D6 or smaller; Trenching machine, maximum digging capacity over 5 ft. depth; Vermeer T-600B rock cutter

GROUP 6: Armor-Coater (or similar); Ballast jack tamper; Boom- type backfilling machine; Assistant plant engineer; ridge and/or gantry crane; Chemical grouting machine, truck-mounted; Chip spreading machine operator; Concrete saw (self-propelled unit on streets, highways, airports and canals); Deck engineer; Drilling equipment Texoma 600, Hughes 200 series or similar up to and including 30 ft. m.r.c.; Drill doctor; Elevator operator; Helicopter radio operator; Hydro-Hammer or similar; Line master; Locomotive; Luff hi-lift or similar; Truck crane oiler; Pavement breaker, truck-mounted, with compressor combination; Petro mat laying machine; Pipe bending machine (pipelines only); Pipe wrapping machine (tractor-propelled and supported);

Screed, except asphaltic concrete paving; Self-propelled pipeline wrapping machine; Soils & materials tester; Tractor

GROUP 7: Ballast regulator; Boom truck or dual-purpose A-frame truck; Cary lift or similar; Combination slurry mixer and/or cleaner; Drilling equipment, 20 ft. and under m.r.c.; Fire tender hot plant; Forklift (20' and over) or lumber stacker (construction jobsite); Grouting machine operator; Highline cableway signalperson; Stationary belt loader (Kolman or similar); Lift slab machine (Vagtborg and similar types); Maginnes internal full slab vibrator; Material hoist (1 drum); Mechanical trench shield; Motor operator; Pavement breaker with or without compressor combination; Pipe cleaning machine (tractor-propelled and supported); Post driver; Roller (except asphalt); Self-propelled automatically-applied concrete curing machine (on streets, highways, airports and canals); Self-propelled compactor (without dozer); Signal person; Slip-form pumps (lifting device for concrete forms); Tie spacer; Tower mobile; Trenching machine - maximum digging capacity up to and including 5 ft. depth; Truck-type loader

GROUP 8: Bit sharpener; Boiler tender; Box operator; Brake person; Combination mixer and compressor (gunite); Compressor operator; Deckhand; Fire tender; Forklift (under 20 ft.); Generator; Hydraulic monitor; Ken seal machine (or similar); Mixermobile; Oiler; Pump operator; Refrigeration plant; Reservoir-debris tug (self-propelled floating); Ross carrier (construction site); Rotomist operator; Self-propelled tape machine; Shuttlecar; Self-propelled power sweeper operator; Slusher; Surface heater; Switch person; Tar pot fire tender; Tugger hoist, single drum; Vacuum cooling plant; Welding machine (powered other than by electricity)

TRUCK DRIVER CLASSIFICATIONS

GROUP 1: Bulk cement spreader (with or without auger, under 4 yds. water level); Bus driver; Concrete pump machine; Concrete pump truck (when flat rack truck is used appropriate flat rack rate shall apply); Dump (under 4 yds. water level); Dumpcrete truck (under 4 yds. water level); Dumpster (under 4 yds. water level); Escort or pilot car driver; Nipper truck (when flat rack truck is used appropriate flat rack rate shall apply); Pick-up; Skid (debris box, under 4 yds. water level); Team driver; Truck (dry pre-batch concrete mix, under 4 yds. water level)

GROUP 2: Teamster oiler and/or greaser and/or service

GROUP 3: Bulk cement spreader (with or without auger, 4 yd. and under 6 yds. water level); Dump (4 yds. and under 6 yds. water level); Dumpcrete (4 yds. and under 6 yds. water level); Dumpster (4 yds. and under 6 yds. water level); Skid (debris box, 4 yds. and under 6 yds. water level);

Single unit flat rack (2-axle unit); Industrial lift truck (mechanical tailgate); Truck (dry pre-batch concrete mix, 4 yds. and under 6 yds. water level)

GROUP 4: Jetting truck and water truck (under 2,500 gallons)

GROUP 5: Road oil truck or boot

GROUP 6: Lift jitney, fork lift

GROUP 7: Transit mix, agitator (under 6 yds.)

GROUP 8: Fuel and/or grease truck driver or fuel worker

GROUP 9: Vacuum truck, under 3,500 gallons

GROUP 10: Scissor truck; Single unit flat rack (3-axle unit); Industrial lift truck (mechanical tailgate); Small rubber-tired tractor (when used within teamsters' jurisdiction)

GROUP 11: Jetting truck and water truck, 2,500 gallons and under 4,000 gallons

GROUP 12: Combination winch truck with hoist; Transit mix or agitator (6 yds. and under 8 yds.)

GROUP 13: Vacuum truck, 3,500 gallons and under 5,500 gallons

GROUP 14: Rubber-tired muck car (not self-loaded)

GROUP 15: Bulk cement spreader (with or without auger, 6 yds. and under 8 yds. water level); Dump (6 yds. and under 8 yds. water level); Dumpcrete (6 yds. and under 8 yds. water level); Dumpster (6 yds. and under 8 yds. water level); Skid (debris box, 6 yds. and under 8 yds. water level); Truck (dry pre-batch concrete mix, 6 yds. and under 8 yds. water level)

GROUP 16: A-frame, winch truck; Buggymobile; Jetting and water truck (4,000 gallons and under 5,000 gallons); Rubber-tired truck jumbo

GROUP 17: Heavy-duty transport (high bed)

GROUP 18: Ross Hyster and similar straddle carrier

GROUP 19: Transit mix or agitator (8 yds. through 10 yds.)

GROUP 20: Vacuum truck (5,500 gallons and under 7,500 gallons)

GROUP 21: Jetting truck and water truck (5,000 gallons and under 7,000 gallons)

GROUP 22: Combination boot person and road oiler

GROUP 23: Transit mix or agitator (over 10 yds. through 12 yds.)

GROUP 24: Bulk cement spreader (with or without auger, 8 ys. and including 12 yds. water level); Dump (8 yds. and including 12 yds. water level); Dumpcrete (8 yds. and including 12 yds. water level); Dumpster (8 yds. and including 12 yds. water level); Self-propelled street sweeper with self-contained refuse bin; Skid (debris box, 8 yds. and including 12 yds. water level); Snow Go and/or snow plow; Truck (dry pre-batch concrete mix, 8 yds. and including 12 yds. water level)

GROUP 25: Heavy-duty transport (gooseneck lowbed); Transit mix or agitator (over 12 yds. through 14 yds.)

GROUP 26: Ammonia nitrate distributor driver and mixer; Bulk cement spreader (with or without auger, over 12 yds. and including 18 yds. water level); Dump (over 12 yds. and including 18 yds. water level); Dumpcrete (over 12 yds. and including 18 yds. water level); Dumpster (over 12 yds. and including 18 yds. water level); Skid (debris box, over 12 yds. and including 18 yds. water level); Truck (dry pre-batch concrete mix, over 12 yds. and including 18 yds. water level)

GROUP 27: Double gooseneck (7 or more axles); Heavy-duty transport tiller

GROUP 28: P.B. or similar type self-loading truck

GROUP 29: Transit mix agitator (over 14 yds. through 16 yds.)

GROUP 30: Truck repair; Hydro-lift or Swedish crane type (including when Swedish crane is used for jetting); Hydro-lift extension or retracting crane (boom-type)

GROUP 31: Bulk cement spreader (with or without auger, over 18 yds. and including 24 yds. water level); Combination dump and dump trailer; Dump (over 18 yds. and including 24 yds. water level); Dumpcrete (over 18 yds. and including 24 yds. water level); Dumpster (over 18 yds. and including 24 yds. water level); Skid (debris box, over 18 yds. and including 24 yds. water level); Transit mix agitator (over 12 yds. through 16 yds.); Truck (dry pre-batch concrete mix, over 18 yds. and including 24 yds. water level)

GROUP 32: Bulk cement spreader (with or without auger, over 24 yds. and including 35 yds. water level); Dump (over 24 yds. and including 35 yds. water level); Dumpcrete (over 24 yds. and including 35 yds. water level); Dumpster (over 24 yds. and including 35 yds. water level); DW 10's, 20's, 21's and other similar Cat type, Terra Cobra, LeTournapulls, Tournarocker, Euclid and similar type equipment when pulling fuel and/or grease tank trailers or

other miscellaneous trailers; Skid (debris box, over 24 yds. and including 35 yds. water level); Truck (dry pre-batch concrete mix, over 24 yds. and including 35 yds. water level)

GROUP 33: Bulk cement spreader (with or without auger, over 35 yds. and including 50 yds. water level); Dump (over 35 yds. and including 50 yds. water level); Dumpcrete (over 35 yds. and including 50 yds. water level); Dumpster (over 35 yds. and including 50 yds. water level); Skid (debris box, over 35 yds. and including 50 yds. water level); Truck (dry pre-batch concrete mix, over 35 yds. and including 50 yds. water level)

GROUP 34: DW 10's, 20's, 21's and other similar Cat type, Terra Cobra, LeTournapulls, Tournarocker, Euclid and similar type equipment when pulling Aqua/Pak or water tank trailers

GROUP 35: Bulk cement spreader (with or without auger, over 50 yds. and under 65 yds. water level); Dump (over 50 yds. and under 65 yds. water level); Dumpcrete (over 50 yds. and under 65 yds. water level); Dumpster (over 50 yds. and under 65 yds. water level); Helicopter pilot (when transporting workers ormaterials); Skid (debris box, over 50 yds. and under 65 yds. water level); Truck (dry pre-batch concrete mix, over 50 yds. and under 65 yds. water level)

GROUP 36: Over 65 to 80 yds.

GROUP 37: Over 80 to 95 yds.

WELDERS - Receive rate prescribed for craft performing operation to which welding is incidental.

==========

Unlisted classifications needed for work not included within the scope of the classifications listed may be added after award only as provided in the labor standards contract clauses (29CFR 5.5 (a) (1) (ii)).

The body of each wage determination lists the classification and wage rates that have been found to be prevailing for the cited type(s) of construction in the area covered by the wage determination. The classifications are listed in alphabetical order of "identifiers" that indicate whether the particular rate is a union rate (current union negotiated rate for local), a survey rate (weighted average rate) or a union average rate

(weighted union average rate).

Union Rate Identifiers

A four letter classification abbreviation identifier enclosed in dotted lines beginning with characters other than "SU" or "UAVG" denotes that the union classification and rate were prevailing for that classification in the survey. Example: PLUM0198-005 07/01/2014. PLUM is an abbreviation identifier of the union which prevailed in the survey for this classification, which in this example would be Plumbers. 0198 indicates the local union number or district council number where applicable, i.e., Plumbers Local 0198. The next number, 005 in the example, is an internal number used in processing the wage determination. 07/01/2014 is the effective date of the most current negotiated rate, which in this example is July 1, 2014.

Union prevailing wage rates are updated to reflect all rate changes in the collective bargaining agreement (CBA) governing this classification and rate.

Survey Rate Identifiers

Classifications listed under the "SU" identifier indicate that no one rate prevailed for this classification in the survey and the published rate is derived by computing a weighted average rate based on all the rates reported in the survey for that classification. As this weighted average rate includes all rates reported in the survey, it may include both union and non-union rates. Example: SULA2012-007 5/13/2014. SU indicates the rates are survey rates based on a weighted average calculation of rates and are not majority rates. LA indicates the State of Louisiana. 2012 is the year of survey on which these classifications and rates are based. The next number, 007 in the example, is an internal number used in producing the wage determination. 5/13/2014 indicates the survey completion date for the classifications and rates under that identifier.

Survey wage rates are not updated and remain in effect until a new survey is conducted.

Union Average Rate Identifiers

Classification(s) listed under the UAVG identifier indicate that no single majority rate prevailed for those classifications; however, 100% of the data reported for the classifications was union data. EXAMPLE: UAVG-OH-0010 08/29/2014. UAVG indicates that the rate is a weighted union average rate. OH indicates the state. The next number, 0010 in the example, is an internal number used in producing the wage determination. 08/29/2014 indicates the survey completion date for the classifications and rates under that identifier.

A UAVG rate will be updated once a year, usually in January of each year, to reflect a weighted average of the current negotiated/CBA rate of the union locals from which the rate is

based.

WAGE DETERMINATION APPEALS PROCESS

1.) Has there been an initial decision in the matter? This can be:

* an existing published wage determination
* a survey underlying a wage determination
* a Wage and Hour Division letter setting forth a position on a wage determination matter
* a conformance (additional classification and rate) ruling

On survey related matters, initial contact, including requests for summaries of surveys, should be with the Wage and Hour Regional Office for the area in which the survey was conducted because those Regional Offices have responsibility for the Davis-Bacon survey program. If the response from this initial contact is not satisfactory, then the process described in 2.) and 3.) should be followed.

With regard to any other matter not yet ripe for the formal process described here, initial contact should be with the Branch of Construction Wage Determinations. Write to:

Branch of Construction Wage Determinations
Wage and Hour Division
U.S. Department of Labor
200 Constitution Avenue, N.W.
Washington, DC 20210

2.) If the answer to the question in 1.) is yes, then an interested party (those affected by the action) can request review and reconsideration from the Wage and Hour Administrator (See 29 CFR Part 1.8 and 29 CFR Part 7). Write to:

Wage and Hour Administrator
U.S. Department of Labor
200 Constitution Avenue, N.W.
Washington, DC 20210

The request should be accompanied by a full statement of the interested party's position and by any information (wage payment data, project description, area practice material, etc.) that the requestor considers relevant to the issue.

3.) If the decision of the Administrator is not favorable, an interested party may appeal directly to the Administrative Review Board (formerly the Wage Appeals Board). Write to:

Administrative Review Board
U.S. Department of Labor
200 Constitution Avenue, N.W.

Washington, DC 20210

4.) All decisions by the Administrative Review Board are final.

==========

END OF GENERAL DECISION

Jet Boat Tours
Owner designated disposal area
Tank Location
Contractor to: Maintain construction entrance, level deposited material, provide adequate erosion and dust control during operations
101
Redwood Hwy
Salmon Rd
Skyside Ct
Klamath Blvd
Ehlers Ave

KLAMATH WATER TANK

FOR

YUROK TRIBE PLANNING DEPARTMENT

15540 U.S. HWY 101 NORTH, KLAMATH, CA 95548

PH: (530) 625-4759 FAX: (530) 625-4745

LEGEND

PROPOSED		EXISTING
	CABLE TV OVERHEAD	TV
	POWER OVERHEAD	E(OH)
	TELEPHONE OVERHEAD	T(OH)
	TELEPHONE UG	T(UG)
	POWER (UNDERGROUND) UG	E(UG)
	GAS LINE	G
	ANCHOR/GUY WIRE	
	SEWER MANHOLE	
8" S	SEWER LINE	8" S
	FLUSHING BRANCH/CLEANOUT	
	SEWER SERVICE	
	STORM DRAIN MANHOLE	
12" D	STORM DRAIN PIPE	12" D
	STORM DRAIN INLET	
	WATER LINE	
	WATER VALVE	
	REDUCER	
	BLOW OFF ASSEMBLY	
	AIR RELIEF VALVE	
	FIRE HYDRANT ASSEMBLY	
	R.P. BACKFLOW PREVENTER	
	DRIVE WAY	
	SIDEWALK RAMP	
	BARRICADE	
	SURVEY MONUMENT	
	CENTERLINE	
	RIGHT OF WAY LINE	
	PROPERTY LINE	
	EASEMENT LINE	
	EDGE OF PAVEMENT	
—R—R—R—	RIDGE LINE	—R—R—R—
—X—	FENCE LINE	—X—X—X—
40	CONTOUR LINE	40
	SIDEWALK	
	STREET LIGHT	
	STREET NAME SIGN	
	SIGN	

ABREVIATIONS

AC = ASPHALTIC CONCRETE
AB = AGGREGATE BASE
A.D. = ALGEBRAIC DIFFERENCE
BC, PC = BEGIN CURVE
CO = CLEAN OUT
CL = CENTER LINE
CMP = CORRUGATED METAL PIPE
CPCT. = COMPACT
D = DELTA
DET = DETAIL
DRN = DRAIN
<E> = EXISTING
EC = END CURVE
EG = EXISTING GROUND
EP = EDGE OF PAVEMENT
FF = FINISH FLOOR
FG = FINISH GRADE
FH = FIRE HYDRENT
FL = FLOW LINE
GA = GUY ANCHOR
GV = GATE VALVE
HC = HANDICAPPED
HDPE = HIGH DENSITY POLYETHYLENE PIPE
INV = INVERT
(INT-X) = INTERSECTION
K = SIGHT DISTANCE
LAT = LATERAL
LD. = LOCAL DEPRESSION
LF. = LINEAR FEET
LF. = SEWER LEACH FIELD
LT. = LEFT
MAS. = MASONRY
MI = MILES
MSE = MECHANICALLY STABILIZED EARTH
(N) = NEW
NTS = NOT TO SCALE
O.C. = ON CENTER
PG&E = PACIFIC GAS & ELECTRIC
(P) = PROPOSED
PP = POWER POLE
PRC = POINT OF REVERSE CURVE
PT = POINT
PVI = POINT OF VERTICAL INTERSECTION
PVT = PRIVATE
ROW = RIGHT OF WAY
RT = RIGHT
RTN = RETERN
SB = SET BACK
SDMH = STORM DRAIN MAN HOLE
SHT = SHEET
SD = STORM DRAIN
STA = STATION
STD. = STANDARD
TC = TOP OF CURB
TBC = TOP BACK OF CURB
TFC = TOP FACE OF CURB
TOB = TOP OF BANK
TEL = TELEPHONE
TP = TOP OF PAVEMENT
TVCE = TRINITY VALLEY CONSULTING ENGINEERS
TW = TOP OF WALL
(TYP) = TYPICAL
UG = UNDERGROUND
W = WATER
WV = WATER VALVE

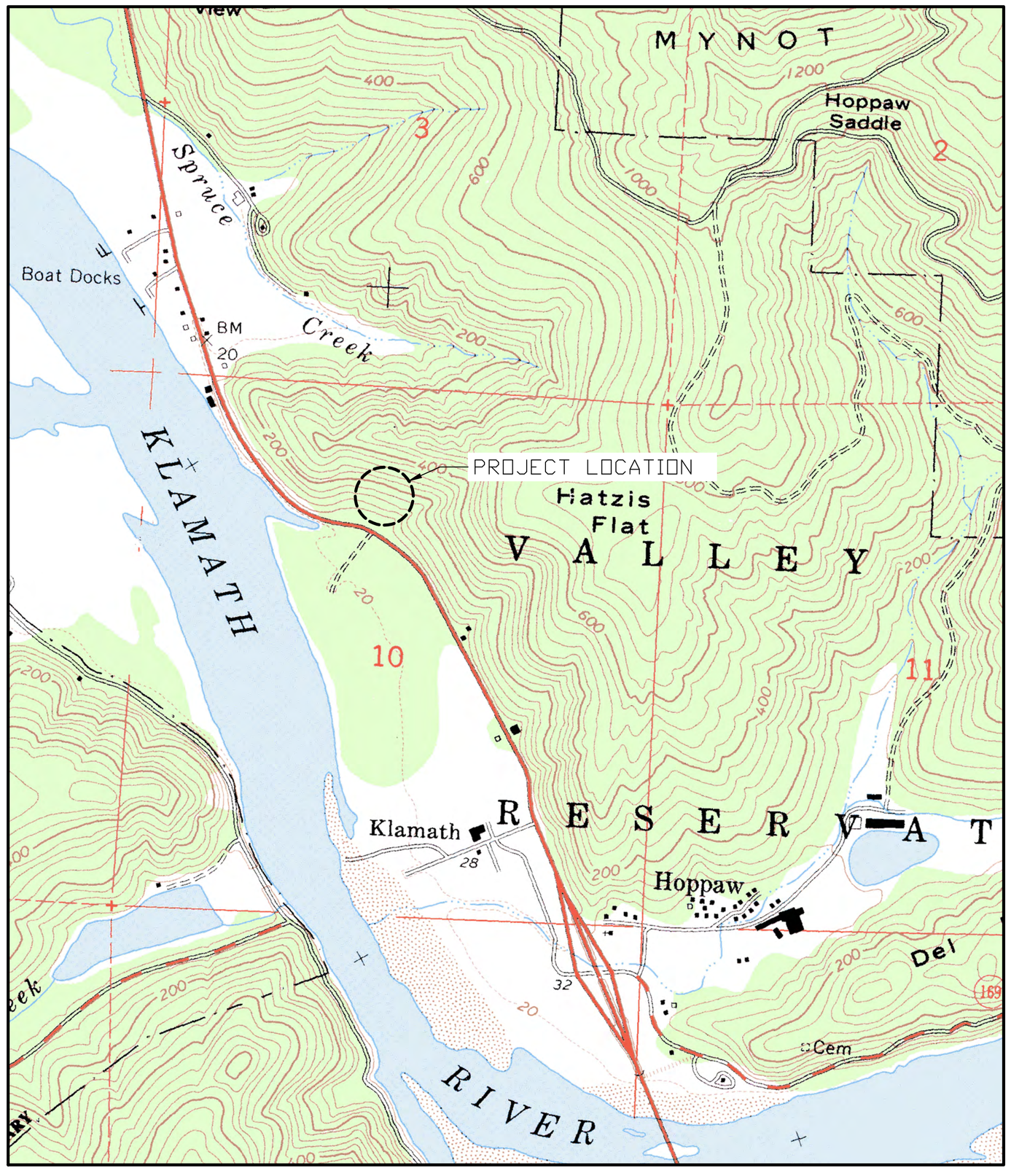

LOCATION MAP
NTS

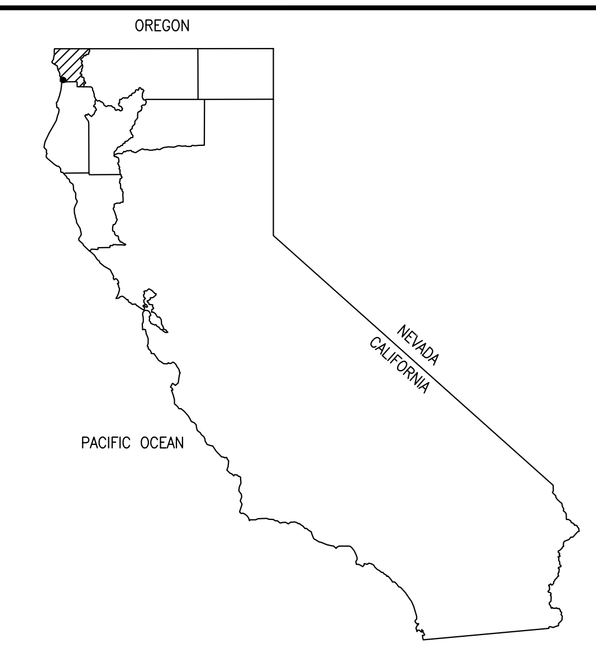

AREA MAP
NTS

APPROVALS

TRINITY VALLEY CONSULTING ENGINEERS, INC.

JOSHUA T. McKNIGHT, PROJECT ENGINEER DATE

KLAMATH COMMUNITY SERVICE DISTRICT (OWNER)

NAME DATE

YUROK TRIBE PLANNING DEPARTMENT (TRIBE)

NAME DATE

SHEET INDEX

DRAWING #	TITLE	REVISION	DATE
T01	TITLE SHEET	1	09/01/16
C01	GENERAL NOTES & QUANTITIES	0	06/30/16
C02	EXISTING SITE LAYOUT	0	06/30/16
C03	PROPOSED SITE LAYOUT	1	09/01/16
C04	CLEARING, GRUBBING, AND DEMOLITION PLAN	0	06/30/16
C05.0	GRADING PLAN	0	06/30/16
C05.1	SITE SECTIONS	0	06/30/16
C05.2	GRADING DETAILS	0	06/30/16
C06.0	UTILITY PLAN – WATER	1	09/01/16
C06.1	WATER DETAILS	0	06/30/16
C07.1	FENCE DETAILS	0	06/30/16
C07.2	FENCE DETAILS	0	06/30/16
C08.0	EROSION CONTROL PLAN	1	09/01/16
C08.1	EROSION CONTROL DETAILS	0	06/30/16
S01	TANK FOUNDATION PLAN	0	06/30/16

CONTRACTOR ALERT!

CONTRACTOR MUST CONTACT USA DIG AT 800-227-2600 AT LEAST 72 HOURS BEFORE ANY EARTHWORK OR ACTIVITIES THAT MAY IMPACT EXISTING UNDERGROUND UTILITIES.

EXISTING UTILITY ALIGNMENTS BOTH HORIZONTALLY AND VERTICALLY MUST BE VERIFIED BY THE CONTRACTOR PRIOR TO ANY CONSTRUCTION ACTIVITIES.

TVCE
57 WALNUT WAY
P.O. BOX 152
WILLOW CREEK, CA 95573
PHONE (530) 629-3000
FAX (530) 629-3011

REV	DATE	DESCRIPTION	DWN BY	DES BY	CHK BY	APP BY
1	6/30/16	PRELIMINARY DESIGN	EEK	FAM	JTM	TVCE
2	09/01/16	ADDENDUM 1 PIPING	EEK	FAM	JTM	TVCE

YUROK TRIBE PLANNING DEPARTMENT
KLAMATH WATER TANK

TITLE SHEET

KLAMATH, DEL NORTE COUNTY, CALIFORNIA

DRAWN BY: E. KEYES
DESIGNED BY: F. MASTEN
CHECKED BY: J. McKNIGHT
APPROVED BY: TVCE

DATE OF ISSUE: JUNE 2016

SCALE: AS SHOWN

PROJECT NO: 484

DRAWING NO: T01

\\Tvceserver\d\TVCE\Projects\400-499\#484 - Yurok Roads\2016\484.20_Klamath Water Tank\dwg\00_cover_rev1.dwg, 9/2/2016 8:23:38 AM, ARCH full bleed D (24.00 x 36.00 inches), 1:1, tvce, tvce

GENERAL NOTES:

1. DETAILS OF CONSTRUCTION, MATERIALS AND WORKMANSHIP NOT SHOWN IN THESE DRAWINGS SHALL CONFORM TO THE PERTINENT REQUIREMENTS OF THE STANDARD SPECIFICATIONS AND APPLICABLE CONTRACT SPECIFICATIONS.
2. THE CONTRACTOR SHALL PROVIDE ALL UTILITIES AS NECESSARY TO SUCCESSFULLY COMPLETE ALL CONSTRUCTION ACTIVITIES.
3. ALL EXISTING AND PROPOSED DIMENSIONS DEPICTED HEREIN SHALL BE VERIFIED BY THE CONTRACTOR PRIOR TO STARTING WORK.
4. THE CONTRACTOR SHALL COORDINATE WITH THE OWNER ON ALL CONSTRUCTION ACTIVITIES.
5. THE CONTRACTOR SHALL TAKE ALL PRECAUTIONARY MEASURES NECESSARY TO PROTECT EXISTING UTILITIES, WHICH ARE TO REMAIN IN PLACE, FROM DAMAGE. ANY DAMAGE CAUSED BY THE CONTRACTOR'S OPERATIONS SHALL BE EXPEDITIOUSLY REPAIRED OR RECONSTRUCTED TO THE ENGINEER'S SATISFACTION AT THE CONTRACTOR'S SOLE EXPENSE WITHOUT ADDITIONAL COMPENSATION.
6. THE CONTRACTOR SHALL POSSESS THE CLASS, OR CLASSES, OF LICENSE AS SPECIFIED IN THE NOTICE TO CONTRACTORS.
7. THE CONTRACTOR IS TO EXPOSE THE ENDS OF EXISTING BURIED UTILITIES FOR SURVEYORS TO VERIFY LOCATION AND ELEVATION PRIOR TO PLACEMENT OF NEW UTILITIES. ALL COSTS OF SUCH EXCAVATION AND BACKFILL SHALL BE INCLUDED IN THE PRICE PAID FOR VARIOUS ITEMS OF WORK.
8. ALL APPLICABLE FEES TO BE PAID AND PERMITS REQUIRED SHALL BE OBTAINED BY THE CONTRACTOR BEFORE COMMENCEMENT OF CONSTRUCTION.
9. THE TYPES, LOCATIONS, SIZES, AND DEPTHS OF EXISTING UNDERGROUND UTILITIES AS SHOWN ON THESE IMPROVEMENT PLANS WERE OBTAINED FROM SOURCES OF VARYING RELIABILITY. THE CONTRACTOR IS CAUTIONED THAT ONLY ACTUAL EXCAVATION WILL REVEAL THE TYPES, EXTENT, SIZES, LOCATIONS, AND DEPTHS OF SUCH UNDERGROUND UTILITIES. A REASONABLE EFFORT HAS BEEN MADE TO LOCATE AND DELINEATE ALL KNOWN UNDERGROUND UTILITIES, HOWEVER, TVCE CAN ASSUME NO RESPONSIBILITY FOR THE COMPLETENESS OR ACCURACY OF ITS DELINEATION OF SUCH UNDERGROUND UTILITIES NOR FOR THE EXISTENCE OF OTHER BURIED OBJECTS OR UTILITIES WHICH MAY BE ENCOUNTERED BUT WHICH ARE NOT DEPICTED ON THESE DRAWINGS.
10. THE CONTRACTOR AGREES THAT IN ACCORDANCE WITH GENERALLY ACCEPTED CONSTRUCTION PRACTICES, THE CONSTRUCTION CONTRACTOR WILL BE REQUIRED TO ASSUME SOLE AND COMPLETE RESPONSIBILITY FOR THE JOB SITE CONDITIONS DURING THE COURSE OF CONSTRUCTION OF THE PROJECT, INCLUDING SAFETY OF ALL PERSONS AND PROPERTY, THAT THIS REQUIREMENT SHALL BE MADE TO APPLY CONTINUOUSLY AND NOT BE LIMITED TO NORMAL WORKING HOURS, AND THE CONTRACTOR FURTHER AGREES TO DEFEND, INDEMNIFY AND HOLD THE DESIGN PROFESSIONAL HARMLESS FROM ANY AND ALL LIABILITY, REAL OR ALLEGED, IN CONNECTION WITH THE PERFORMANCE OF WORK ON THIS PROJECT, EXCEPTING LIABILITY ARISING FROM THE SOLE NEGLIGENCE OF THE DESIGN PROFESSIONAL.
11. THE CONTRACTOR OR ANY SUBCONTRACTOR FOR THIS CONTRACT SHALL NOTIFY MEMBERS OF U.S.A. TWO WORKING DAYS IN ADVANCE OF PERFORMING ANY EXCAVATION WORK BY CALLING THE TOLL FREE NUMBER 1-800-227-2600.
12. THE CONTRACTOR SHALL BE RESPONSIBLE FOR THE PROTECTION OF ALL EXISTING SURVEY MONUMENTS AND OTHER SURVEY MARKERS DURING CONSTRUCTION. ALL SUCH MONUMENTS OR MARKERS DESTROYED DURING CONSTRUCTION SHALL BE REPLACED AT THE CONTRACTOR'S EXPENSE.
13. UNDOCUMENTED PIPING EXPOSED DURING CONSTRUCTION SHALL BE LOCATED AND MARKED BY THE CONTRACTOR FOR INCLUSION IN AS-BUILT DRAWINGS.
14. ALL NEW BURIED PIPING SHALL HAVE A MINIMUM OF 3 FEET OF COVER UNLESS OTHERWISE SPECIFIED.

CULTURALLY SENSITIVE AREAS:

1. AREAS WITHIN THE PROJECT PERIMETER THAT ARE CULTURALLY SENSITIVE SHALL BE PROTECTED AGAINST DAMAGE FROM CONSTRUCTION ACTIVITIES. AT NO TIME SHALL SUCH CULTURALLY SENSITIVE AREAS BE ENTERED, PARKED UPON, STOCK PILED UPON, OR HAVE ANY OTHER ACTIVITY ASSOCIATED WITH THE CONSTRUCTION OF THIS PROJECT IN ANY WAY INFRINGE UPON, DETERIORATE, DESTROY, OR RENDER TO A STATE OR CONDITION UNACCEPTABLE ANY CULTURALLY SENSITIVE AREA. THE CONTRACTOR AGREES TO PROTECT ALL SUCH AREAS DURING ANY AND ALL ACTIVITIES ASSOCIATED WITH THE CONSTRUCTION OF THIS PROJECT.

SYMBOLS

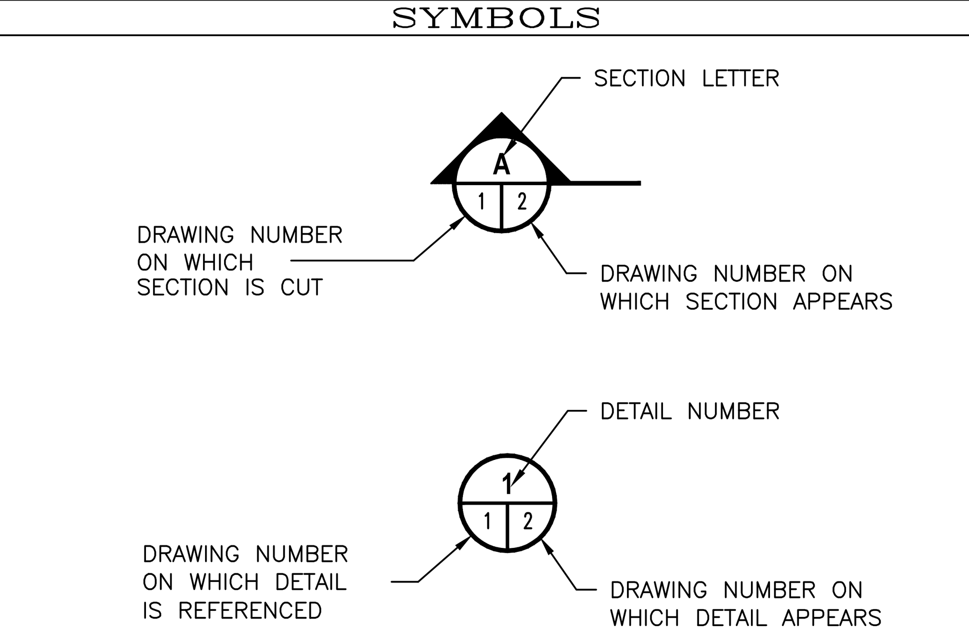

TRAFFIC CONTROL NOTES:

1. WHENEVER THE WORK AREA IS ADJACENT TO A TRAFFIC LANE AND THERE IS A CUT, DITCH OR TRENCH MORE THAN TWO INCHES DEEP, THE CONTRACTOR SHALL MAINTAIN CONTINUOUS BARRICADES SPACED AT APPROXIMATELY 20-FOOT INTERVALS FOR THE FIRST 100 FEET FROM THE BEGINNING OF THE CUT, DITCH OR TRENCH, AND AT APPROXIMATELY 50-FOOT INTERVALS THEREAFTER. IF THE CUT, DITCH OR TRENCH IS MORE THAN TEN FEET FROM A TRAFFIC LANE, THE BARRICADED SPACING MAY BE GREATER BUT SHALL NOT EXCEED 200 FEET.
2. UNLESS SPECIFICALLY SET FORTH AS SPECIAL PROVISIONS, ALL MARKED LANES OF TRAFFIC SHALL BE UNOBSTRUCTED IN EACH DIRECTION DURING THE PEAK TRAFFIC HOURS OF 7:00 TO 8:30AM AND 3:30 TO 6:00 PM.
3. SAFE VEHICULAR AND PEDESTRIAN ACCESS SHALL BE PROVIDED AT ALL TIMES DURING CONSTRUCTION.
4. TRACK MOUNTED VEHICLES SHALL NOT BE OPERATED ON PAVED ROADS.

AGGREGATE BASE ROCK NOTES:

1. AGGREGATE BASE SHALL BE CALTRANS CLASS II.
2. AGGREGATE BASE SHALL BE INSTALLED PER SECTION 26 OF THE CALTRANS STANDARD SPECIFICATIONS.
3. AGGREGATE BASE SHALL BE COMPACTED TO A MINIMUM OF 95% RELATIVE COMPACTION PER CAL 316.

ASPHALT CONCRETE NOTES:

1. ASPHALT CONCRETE SHALL BE ½" MAXIMUM RADIUS HOT MIX TYPE A.
2. ASPHALT CONCRETE SHALL BE INSTALLED IN STRICT ACCORDANCE WITH SECTION 39 OF THE CALTRANS STANDARD SPECIFICATIONS.
3. ASPHALT CONCRETE SHALL BE COMPACTED TO A MINIMUM OF 95% RELATIVE COMPACTION AS VERIFIED PER CAL 216.
4. EXISTING AC SURFACES SHALL BE CUT TO A NEAT STRAIGHT LINE PARALLEL WITH THE CENTERLINE AND THE EXPOSED EDGE SHALL BE TACKED WITH EMULSION PRIOR TO PAVING. THE EXPOSED BASE MATERIAL SHALL BE GRADED, RE-COMPACTED, AND RESEALED PRIOR TO PAVING.

COMMUNICATIONS NOTES:

1. TELEPHONE/COMMUNICATION FACILITIES DEPICTED ON THESE PLAN SETS ARE FOR GENERAL LOCATION PURPOSES, ACTUAL HARDWARE, ALIGNMENTS, PLACEMENT, AND DESIGN TO BE PROVIDED BY VERIZON. CONTRACTOR TO COORDINATE WITH VERIZON FOR DESIGN AND INSTALLATION OF REQUIRED COMMUNICATION FACILITIES.

ELECTRIC NOTES:

1. POWER/ELECTRICAL FACILITIES DEPICTED ON THESE PLAN SETS ARE FOR GENERAL LOCATION PURPOSES, ACTUAL HARDWARE, ALIGNMENTS, PLACEMENT, AND DESIGN TO BE PROVIDED BY PACIFIC GAS & ELECTRIC (PG&E). CONTRACTOR TO COORDINATE WITH PG&E FOR DESIGN AND INSTALLATION OF REQUIRED COMMUNICATION FACILITIES.

QUANTITIES:

1. QUANTITIES AND LENGTHS OF ITEMS PROVIDED WITHIN THIS PLAN SET ARE APPROXIMATE. IT IS THE RESPONSIBILITY OF THE CONTRACTOR TO VERIFY ACTUAL QUANTITIES OF COMPONENTS REQUIRED FOR THE SUCCESSFUL AND SATISFACTORY COMPLETION OF THE PROJECT.

DUST CONTROL NOTES:

1. THE CONTRACTOR SHALL IMPLEMENT ONE OR BOTH OF THE FOLLOWING MEASURES FOR DUST CONTROL ON THIS SITE:

1.1 SPRAYING OF WATER SO AS NOT TO GENERATE ADDITIONAL RUNOFF. NO DUST PALLIATIVE MATERIALS OTHER THAN WATER WILL BE USED ON THIS PROJECT. IF NON-POTABLE WATER IS TO BE USED, IT MUST BE CONVEYED IN TANKS OR PIPES CLEARLY LABELED AS "NON-POTABLE WATER – DO NOT DRINK".

1.2 COVERS FOR EXPOSED AREAS.

EQUIPMENT & MATERIALS STORAGE NOTES:

1. IT IS THE CONTRACTOR'S RESPONSIBILITY TO ENSURE THAT ALL MATERIALS AND EQUIPMENT STORED ONSITE SHALL HAVE ADEQUATE COVERINGS AND CONTAINMENT TO PREVENT LEAKAGE AND SPILLS.
2. ALL MATERIALS AND EQUIPMENT SHALL BE STORED IN DESIGNATED AND APPROVED AREAS. THE AREA SHALL BE BERMED WITH EARTH DIKES THAT THE CONTRACTOR SHALL INSPECT AND MAINTAIN WEEKLY.
3. ALL FLAMMABLE, REACTIVE, AND/OR IGNITABLE LIQUIDS MUST COMPLY WITH LOCAL FIRE CODES.
4. DURING THE RAINY SEASON (OCTOBER THROUGH APRIL) THE CONTRACTOR SHALL ENSURE THAT MATERIALS ARE COVERED.
5. NO CHEMICALS, DRUMS, OR BAGGED MATERIALS SHALL BE STORED DIRECTLY ON THE GROUND; ITEMS SHALL BE PLACED ON PALLETS AND/OR IN SECONDARY CONTAINMENT.
6. IF DRUMS MUST BE KEPT UNCOVERED, THE CONTRACTOR SHALL STORE THEM AT A SLIGHT ANGLE TO REDUCE PONDING OF RAINWATER AND REDUCE CORROSION.
7. WHEN DANGEROUS MATERIALS AND/OR LIQUID CHEMICALS ARE UNLOADED ONSITE, THE CONTRACTOR SHALL HAVE EMPLOYEES TRAINED IN EMERGENCY SPILL CLEANUP PROCEDURES PRESENT.

VEHICLE MAINTENANCE NOTES:

1. EQUIPMENT AND VEHICLES TRAVELING ONSITE SHALL BE INSPECTED REGULARLY FOR LEAKS AND BE REPAIRED IMMEDIATELY; DO NOT ALLOW LEAKING VEHICLES ONSITE. KEEP VEHICLES AND EQUIPMENT CLEAN (DO NOT ALLOW EXCESSIVE BUILDUP OF OIL AND GREASE).
2. USE OFFSITE REPAIR SHOPS WHENEVER POSSIBLE; IF ONSITE REPAIRS ARE NECESSARY, USE A DESIGNATED AREA SURROUNDED BY EARTH BERMS. THE CONTRACTOR SHALL INSPECT THIS AREA WEEKLY AND AFTER EACH RAINSTORM EVENT TO ENSURE THAT THE EARTH BERMS ARE IN PLACE AND FUNCTIONING PROPERLY; ANY NON-FUNCTIONING BERMS SHALL BE REPAIRED IMMEDIATELY.
3. USE DRY CLEAN-UP METHODS FOR SPILLS AS MUCH AS POSSIBLE; USE ABSORBENT MATERIALS FOR SMALL SPILLS AND DISPOSE OF PROPERLY. USE A SECONDARY CONTAINMENT DURING FLUID CHANGES AND REPAIRS TO CATCH SPILLS.
4. SEGREGATE AND RECYCLE WASTES (INCLUDING BUT NOT LIMITED TO: USED OIL AND OIL FILTERS, BATTERIES, ETC.). KEEP HAZARDOUS WASTES SEPARATE FROM NON-HAZARDOUS WASTES; AFTER REPAIRS, ETC., PROMPTLY TRANSFER USED FLUIDS AND WASTES TO THEIR PROPER CONTAINMENT AREAS AND CONTAINERS.

SUMMARY OF QUANTITIES:

ITEM	DESCRIPTION	PLAN QUANTITY TOTAL	UNIT
001	TEMPORARY FACILITIES	1	LS
002	MOBILIZATION / DEMOBILIZATION	1	LS
003	125,000 GAL BOLTED STEEL TANK	1	LS
004	TANK FOUNDATION	1	LS
005	GRADE ACCESS ROADWAY	1	LS
006	EXCAVATE TANK PAD/ WALL	1	LS
007	SOIL NAIL WALL (FACE)	2600	SF
008	CLASS II AGGREGATE BASE	420	TON
009	HOT MIX ASPHALT	210	TON
010	36"ø CULVERT W/ END SECTION	1	LS
011	EROSION CONTROL	1	LS
012	SECURITY FENCE	210	LF
013	16' SECURITY GATE	1	EA
014	ROCK SLOPE PROTECTION	30	TON
015			
016			
017			
018			
019			
020			
021			
022			
023			
024			
025			

TVCE
67 WALNUT WAY
PO BOX 1567
WILLOW CREEK, CA 95573
PHONE (530) 629-3000
FAX (530) 629-3011

REV	DATE	DESCRIPTION	DWN BY	DES BY	CHK BY	APP BY
0	6/30/16	PRELIMINARY DESIGN	EEK	FAM	JTM	TVCE

KLAMATH WATER TANK

GENERAL NOTES & QUANTITIES

KLAMATH, DEL NORTE COUNTY, CALIFORNIA

DRAWN BY: F. MASTEN
DESIGNED BY: F. MASTEN
CHECKED BY: J. McKNIGHT
APPROVED BY: TVCE

DATE OF ISSUE: JUNE 2016
SCALE: AS SHOWN
PROJECT NO: 484
DRAWING NO: C01

TRINITY VALLEY CONSULTING ENGINEERS, INC.

Y:\400-499\#484 - Yurok Roads\2016\484.20_Klamath Water Tank\dwg\01_notes_and_quantities.dwg, 7/28/2016 2:50:25 PM, ARCH full bleed D (24.00 x 36.00 Inches), 1:1, tvce, tvce

1" 1/2" 0" 1"

TRINITY VALLEY CONSULTING ENGINEERS, INC.

1" 1/2" 0" 1"
X:\YCE\ 484\Work Books\2016\484.00 Klamath Water Tank\dgn\00_site_layout.dgn 7/26/2016 8:43:39 AM ARCH full Model D (24.00 x 36.00 Inches) 1:1 1:1 1:1

PLAN VIEW
1"=40'

0 40 80
SCALE IN FEET

KLAMATH WATER TANK

EXISTING SITE PLAN

KLAMATH, DEL NORTE COUNTY, CALIFORNIA

REV	DATE	DESCRIPTION	DWN BY	DES BY	CHK BY	APP BY
A	6/30/16	PRELIMINARY DESIGN	EEK	FAM	JTM	TVCE

DRAWN BY: E. KEYES
DESIGNED BY: J. McKNIGHT
CHECKED BY: J. McKNIGHT
APPROVED BY:

DATE OF ISSUE: JUNE 2016
SCALE: AS SHOWN
PROJECT NO: 484
DRAWING NO: C02

TVCE
67 WALNUT WAY
P.O. BOX 1570
WILLOW CREEK, CA 95573
PHONE (530) 629-3000
FAX (530) 629-3011

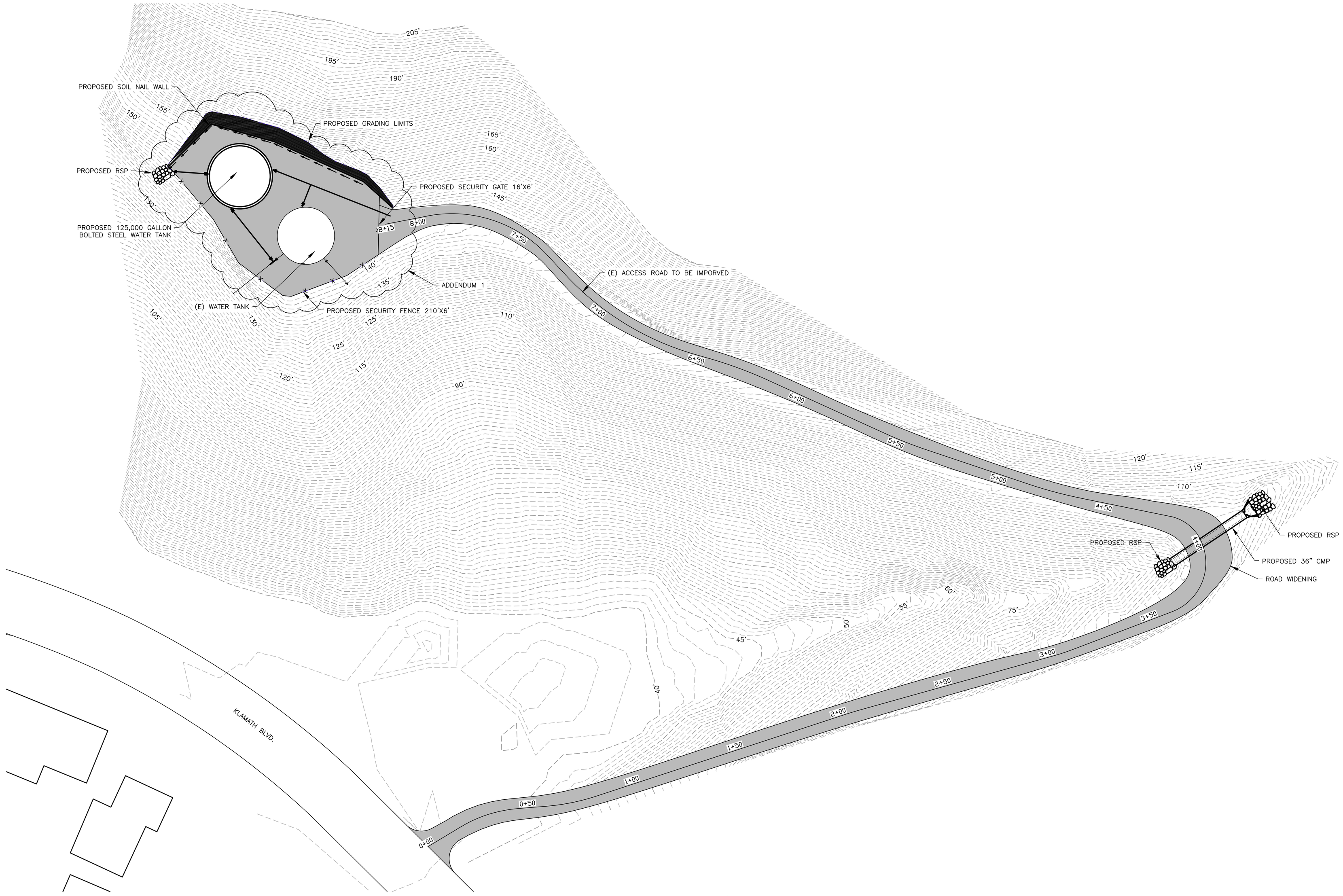

PLAN VIEW
1"=20'
0 20 40
SCALE IN FEET

- N -

TVCE
67 WALNUT WAY
PO BOX 1567
WILLOW CREEK, CA 95573
PHONE (530) 629-3000
FAX (530) 629-3011

REV	DATE	DESCRIPTION	DWN BY	DES BY	CHK BY	APP BY
1	6/30/16	PRELIMINARY DESIGN	EEK	FAM	JTM	TVCE

YUROK TRIBE PLANNING DEPARTMENT
KLAMATH WATER TANK

PROPOSED SITE PLAN

KLAMATH, DEL NORTE COUNTY, CALIFORNIA

DRAWN BY: E. KEYES
DESIGNED BY: J. McKNIGHT
CHECKED BY: J. McKNIGHT
APPROVED BY:

DATE OF ISSUE: JUNE 2016
SCALE: AS SHOWN
PROJECT NO: 484
DRAWING NO: C03

TRINITY VALLEY CONSULTING ENGINEERS, INC.

\\tvceserver\d\TVCE\Projects\400-499\#484 - Yurok Roads\2016\484.20_Klamath Water Tank\dwg\03_P_site_layout_REV1.dwg, 9/2/2016 8:22:58 AM, ARCH full bleed D (24.00 x 36.00 inches), 1:1, tvce, tvce

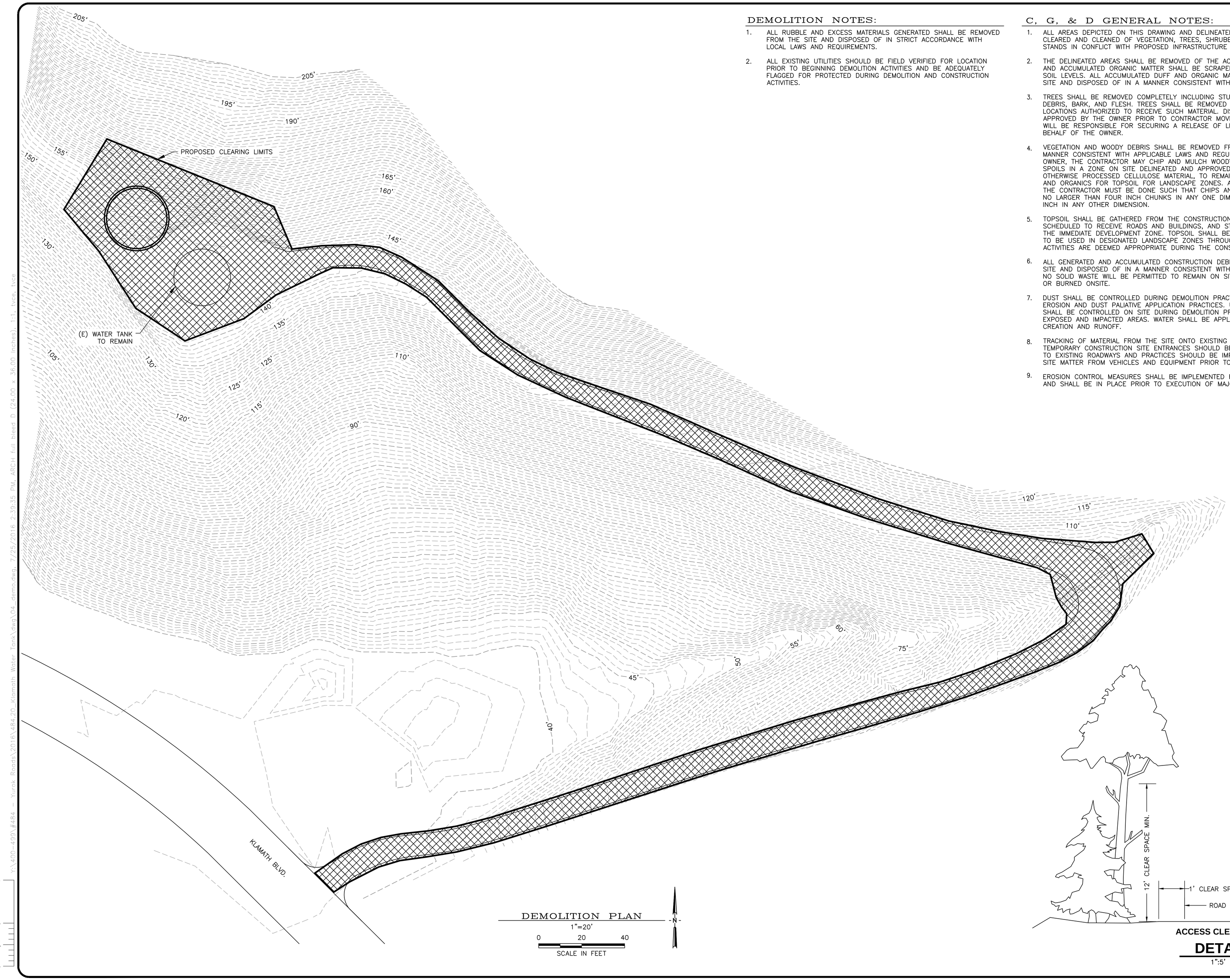

DEMOLITION PLAN
1"=20'
0 20 40
SCALE IN FEET

DEMOLITION NOTES:

1. ALL RUBBLE AND EXCESS MATERIALS GENERATED SHALL BE REMOVED FROM THE SITE AND DISPOSED OF IN STRICT ACCORDANCE WITH LOCAL LAWS AND REQUIREMENTS.
2. ALL EXISTING UTILITIES SHOULD BE FIELD VERIFIED FOR LOCATION PRIOR TO BEGINNING DEMOLITION ACTIVITIES AND BE ADEQUATELY FLAGGED FOR PROTECTED DURING DEMOLITION AND CONSTRUCTION ACTIVITIES.

C, G, & D GENERAL NOTES:

1. ALL AREAS DEPICTED ON THIS DRAWING AND DELINEATED BY THE CLEARING ZONE SHALL BE CLEARED AND CLEANED OF VEGETATION, TREES, SHRUBBERY, AND ORGANIC MATTER THAT STANDS IN CONFLICT WITH PROPOSED INFRASTRUCTURE AND IMPROVEMENTS.
2. THE DELINEATED AREAS SHALL BE REMOVED OF THE ACCUMULATED DUFF LAYER. VEGETATION AND ACCUMULATED ORGANIC MATTER SHALL BE SCRAPED FROM THE SITE DOWN TO NATIVE SOIL LEVELS. ALL ACCUMULATED DUFF AND ORGANIC MATTER SHALL BE REMOVED FROM THE SITE AND DISPOSED OF IN A MANNER CONSISTENT WITH APPLICABLE LAWS AND REGULATIONS.
3. TREES SHALL BE REMOVED COMPLETELY INCLUDING STUMPS, ROOTS, BRANCHES, WOODY DEBRIS, BARK, AND FLESH. TREES SHALL BE REMOVED FROM THE SITE AND DEPOSITED IN LOCATIONS AUTHORIZED TO RECEIVE SUCH MATERIAL. DISPOSAL SITES WILL NEED TO BE APPROVED BY THE OWNER PRIOR TO CONTRACTOR MOVING MATERIAL FROM SITE. CONTRACTOR WILL BE RESPONSIBLE FOR SECURING A RELEASE OF LIABILITY FROM DISPOSAL FACILITIES ON BEHALF OF THE OWNER.
4. VEGETATION AND WOODY DEBRIS SHALL BE REMOVED FROM THE SITE AND DISPOSED OF IN A MANNER CONSISTENT WITH APPLICABLE LAWS AND REGULATIONS. UPON APPROVAL BY THE OWNER, THE CONTRACTOR MAY CHIP AND MULCH WOODY DEBRIS ON SITE AND DEPOSIT SPOILS IN A ZONE ON SITE DELINEATED AND APPROVED BY THE OWNER. CHIPPED OR OTHERWISE PROCESSED CELLULOSE MATERIAL, TO REMAIN ON SITE, WILL BE USED AS FIBER AND ORGANICS FOR TOPSOIL FOR LANDSCAPE ZONES. ALL SUCH MATERIAL PROCESSED BY THE CONTRACTOR MUST BE DONE SUCH THAT CHIPS AND WOODY DEBRIS ARE REDUCED TO NO LARGER THAN FOUR INCH CHUNKS IN ANY ONE DIMENSION AND NO MORE THAN ONE INCH IN ANY OTHER DIMENSION.
5. TOPSOIL SHALL BE GATHERED FROM THE CONSTRUCTION ZONES, INCLUDING ALL AREAS SCHEDULED TO RECEIVE ROADS AND BUILDINGS, AND STOCKPILED IN A LOCATION OUTSIDE OF THE IMMEDIATE DEVELOPMENT ZONE. TOPSOIL SHALL BE HARVESTED AND RETAINED ON SITE TO BE USED IN DESIGNATED LANDSCAPE ZONES THROUGHOUT THE SITE ONCE SUCH ACTIVITIES ARE DEEMED APPROPRIATE DURING THE CONSTRUCTION PROCESS.
6. ALL GENERATED AND ACCUMULATED CONSTRUCTION DEBRIS SHALL BE REMOVED FROM THE SITE AND DISPOSED OF IN A MANNER CONSISTENT WITH APPLICABLE LAWS AND REGULATIONS. NO SOLID WASTE WILL BE PERMITTED TO REMAIN ON SITE. NO SOLID WASTE IS TO BE BURIED OR BURNED ONSITE.
7. DUST SHALL BE CONTROLLED DURING DEMOLITION PRACTICES IN STRICT ACCORDANCE WITH EROSION AND DUST PALIATIVE APPLICATION PRACTICES. UNLESS OTHERWISE SPECIFIED, DUST SHALL BE CONTROLLED ON SITE DURING DEMOLITION PRACTICES BY APPLYING WATER TO EXPOSED AND IMPACTED AREAS. WATER SHALL BE APPLIED AT A RATE THAT MINIMIZES DUST CREATION AND RUNOFF.
8. TRACKING OF MATERIAL FROM THE SITE ONTO EXISTING ROADWAYS WILL NOT BE TOLERATED. TEMPORARY CONSTRUCTION SITE ENTRANCES SHOULD BE BUILT AT POINTS OF INTERSECTION TO EXISTING ROADWAYS AND PRACTICES SHOULD BE IMPLEMENTED TO REMOVE CONSTRUCTION SITE MATTER FROM VEHICLES AND EQUIPMENT PRIOR TO LEAVING THE CONSTRUCTION SITE.
9. EROSION CONTROL MEASURES SHALL BE IMPLEMENTED FOR THE SITE AS SOON AS PRACTICAL AND SHALL BE IN PLACE PRIOR TO EXECUTION OF MAJOR DEMOLITION OPERATIONS.

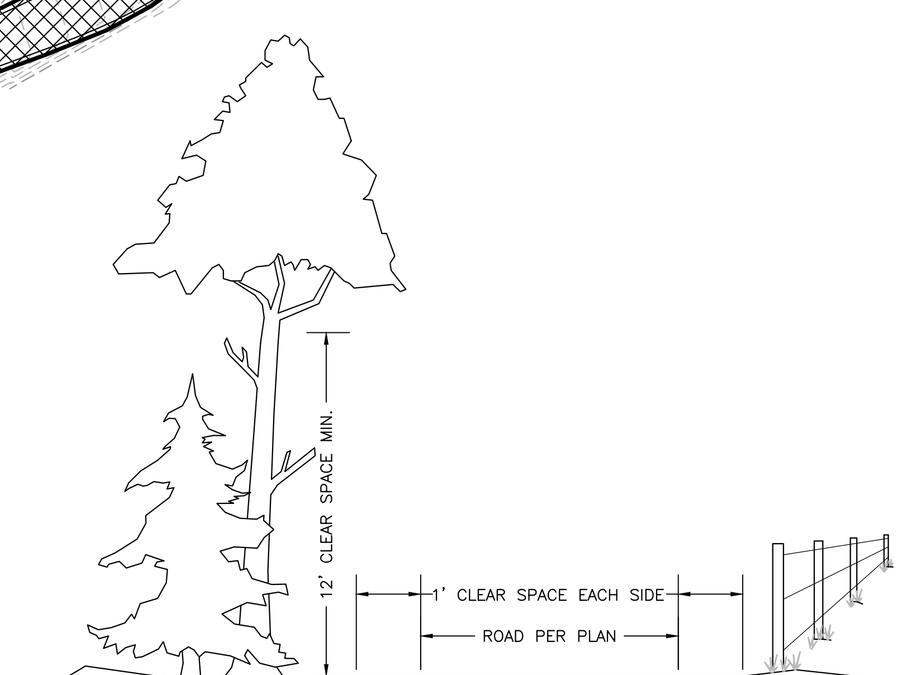

ACCESS CLEARANCE
DETAIL 1 C04 C04
1":5'

TVCE
67 WALNUT WAY
PO BOX 1567
WILLOW CREEK, CA 95573
PHONE (530) 629-3000
FAX (530) 629-3011

REV.	DATE	DESCRIPTION	DWN BY	DES BY	CHK BY	APP BY
A	6/30/16	PRELIMINARY DESIGN	EEK	FAM	JTM	TVCE

YUROK TRIBE PLANNING DEPARTMENT
KLAMATH WATER TANK

DEMOLITION PLAN

KLAMATH, DEL NORTE COUNTY, CALIFORNIA

DRAWN BY: E. KEYES
DESIGNED BY: J. McKNIGHT
CHECKED BY: J. McKNIGHT
APPROVED BY:

DATE OF ISSUE: JUNE 2016
SCALE: AS SHOWN
PROJECT NO: 484
DRAWING NO: C04

TRINITY VALLEY CONSULTING ENGINEERS, INC.

VEGETATION NOTES:

1. ALL AREAS IMPACTED BY GRADING ACTIVITIES SHALL BE REPLANTED WITH GRASS, FOLIAGE, OR OTHER PLANT COVER AS EXISTED PRIOR TO GRADING ACTIVITIES.
2. ALL AREAS REMOVED OF TOPSOIL THAT ARE NOT SCHEDULED TO RECEIVE TRAVEL WAYS OR BUILDINGS SHALL BE REPLENISHED WITH TOPSOIL EQUAL TO OR GREATER THAN WHAT EXISTED PRIOR TO GRADING ACTIVITIES.
3. ALL IMPORT TOPSOIL SHALL BE FREE OF DELETERIOUS ORGANIC MATERIAL, INVASIVE PLANT AND SEED STOCK, AND OTHER MATERIAL OR PLANT COMPOSITES DEEMED UNSUITABLE FOR THE INTENDED USE.

GRADING NOTES:

1. ALL EARTHWORK, INCLUDING BUT NOT LIMITED TO, SITE CLEARING, GRUBBING, STRIPPING, AND GRADING WILL BE CONDUCTED DURING DRY WEATHER CONDITIONS. (TYPICALLY APRIL 15 TO OCTOBER 15)
2. STRIP AND REMOVE ALL TOPSOIL AND VEGETATION FROM THE PROJECT AREA, AND FOR A MINIMUM OF THREE FEET TO THE OUTSIDE OF THE WORKING AREA.
3. ANY UNDOCUMENTED FILL SOILS, FINE-GRAINED RESIDUAL SOILS, AND ANY OTHER DEBRIS ENCOUNTERED AT OR BELOW THE EXISTING GROUND SURFACE SHALL BE REMOVED AT THE LOCATIONS RECEIVING ANY POTENTIAL FILLS.
4. THE SITE SHOULD BE GRADED TO PROVIDE ADEQUATE DRAINAGE SUCH THAT NO WATER IS ALLOWED TO POND ANYWHERE ON THE SITE OR MIGRATE BENEATH PROPOSED DEVELOPMENTS.
5. ALL FILL MATERIAL SHALL BE PLACED IN VERTICAL LIFTS NOT TO EXCEED EIGHT INCHES (8") IN DEPTH AND SHALL BE COMPACTED MECHANICALLY.
6. ALL FILL MATERIAL SHALL BE FREE OF ORGANICS, ROCKS LARGER THAN 3"ø, WOODY DEBRIS, ROOTS, AND ANY OTHER DELETERIOUS MATERIAL.

GRADING NOTES (CONT.):

7. ALL FILL MATERIAL SHALL HAVE A UNIFORM MOISTURE CONTENT AT OR NEAR OPTIMUM MOISTURE CONTENT AS DETERMINED BY TESTING AND APPROVED BY THE ENGINEER.
8. NON-STRUCTURAL FILL SHALL BE COMPACTED TO A FIRM UNYIELDING SURFACE AS APPROVED BY THE ENGINEER.
9. IT IS RECOMMENDED THAT ANY MATERIAL PROPOSED FOR STRUCTURAL FILL MATERIAL TO SUPPORT ANY FOUNDATIONS OR STRUCTURAL BUILDING ELEMENT AND ASSOCIATED UTILITIES BE COMPACTED AS OUTLINED IN THE SOILS REPORT REFERENCE #016144 DATED 6/9/2016 DEVELOPED BY SHN CONSULTING ENGINEERS & GEOLOGISTS, INC.
10. ALL FINAL SLOPES SHALL BE TO A SMOOTH AND EVEN GRADE AND SHALL BE SURFACE TRACKWALKED AS DIRECTED.
11. ALL CUT SLOPES NOT TO EXCEED 1:1 (H:V) ALL FILL SLOPES NOT TO EXCEED 1.5:1 (H:V)
12. SUFFICIENT TESTING AND INSPECTION SHALL BE PERFORMED TO MONITOR THE SUITABILITY OF FILL MATERIALS AND ASSURE COMPLIANCE WITH THE RECOMMENDED COMPACTION STANDARDS.
13. AGGREGATE BASE MATERIAL MAY BE USED FOR PAVEMENT SUBGRADE, PLACED BENEATH FOOTINGS OR FLOOR SLABS, AND USED AS TRENCH BACKFILL. THIS MATERIAL SHOULD MEET THE REQUIREMENTS IN THE CALTRANS STANDARD SPECIFICATIONS FOR 3/4"- CLASS 2 AGGREGATE BASE.

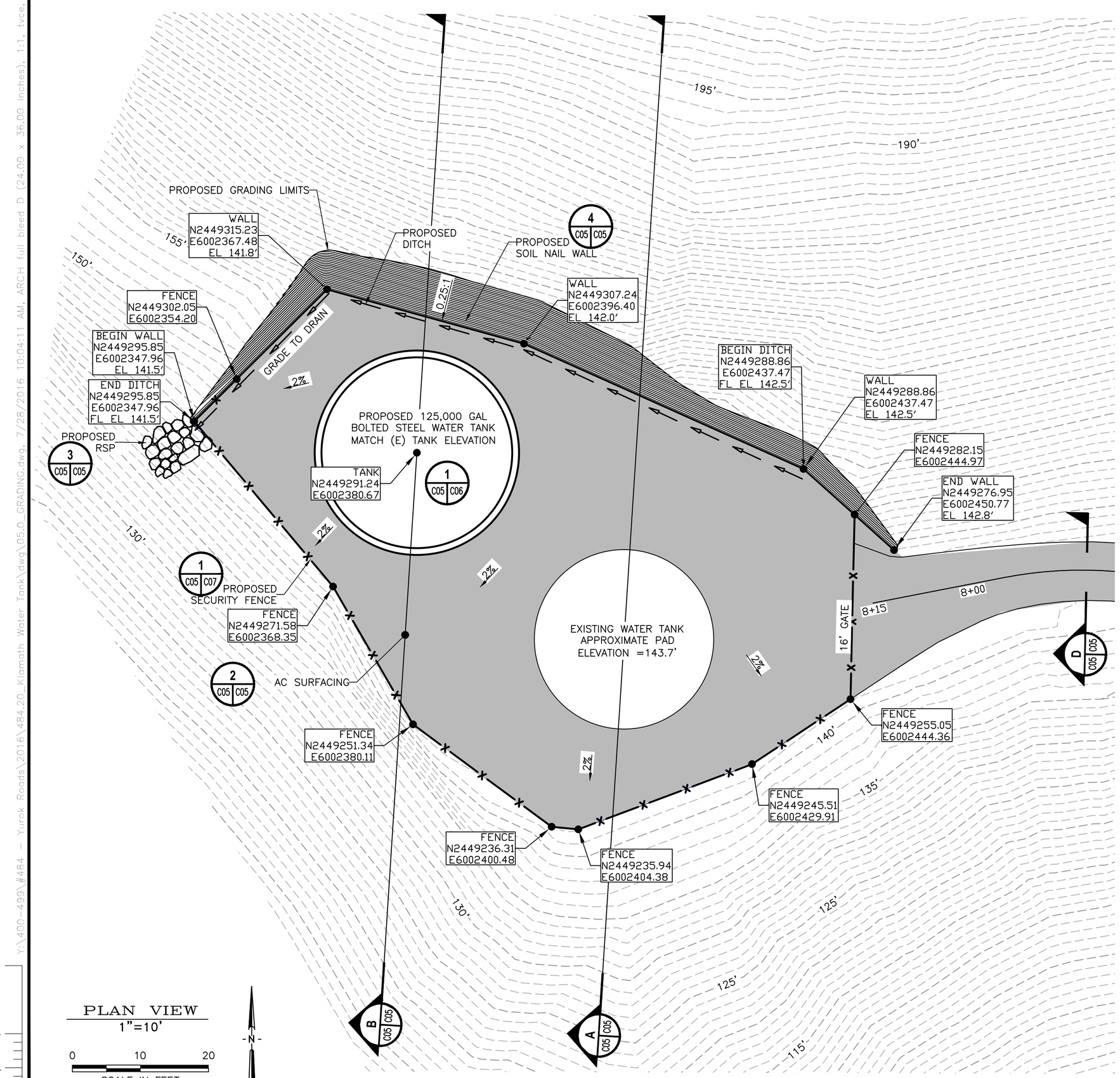

PLAN VIEW
1"=10'
0 10 20
SCALE IN FEET
-N-

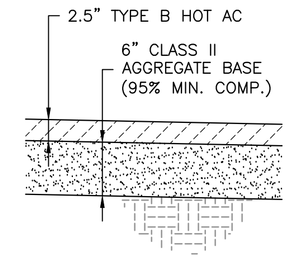

TYP ROAD/PARKING
DETAIL 2 C05 C05
NTS

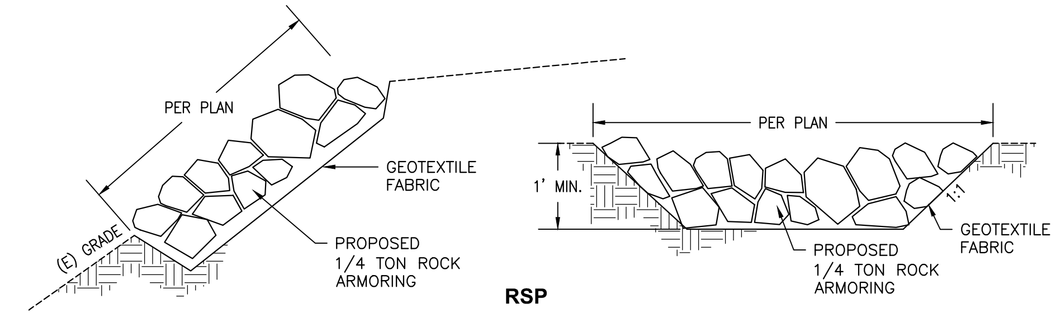

RSP
DETAIL 3 C05 C05
NTS

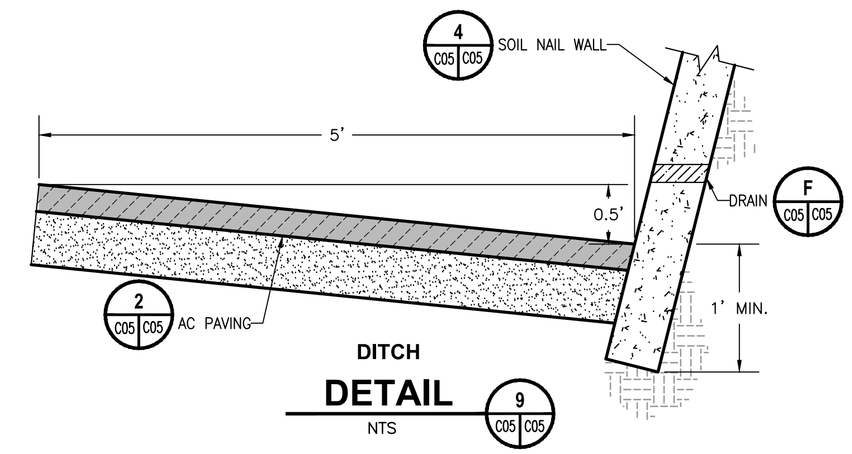

DITCH
DETAIL 9 C05 C05
NTS

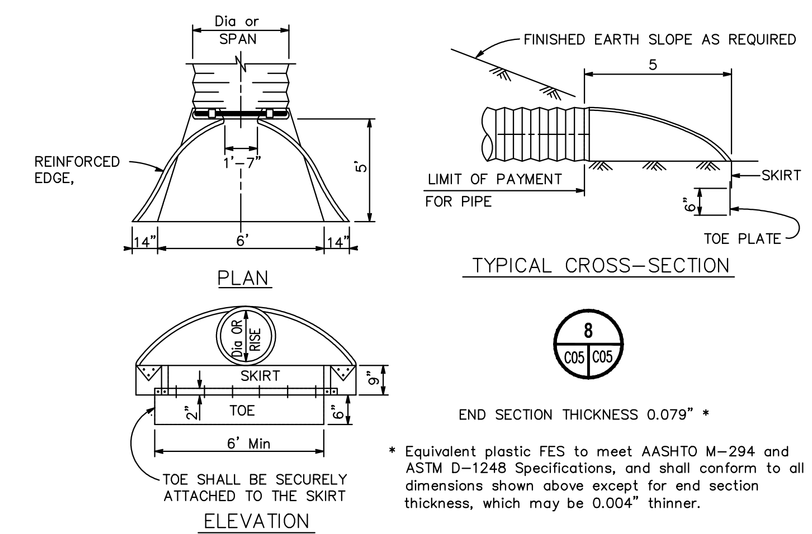

8 C05 C05

END SECTION THICKNESS 0.079" *

* Equivalent plastic FES to meet AASHTO M-294 and ASTM D-1248 Specifications, and shall conform to all dimensions shown above except for end section thickness, which may be 0.004" thinner.

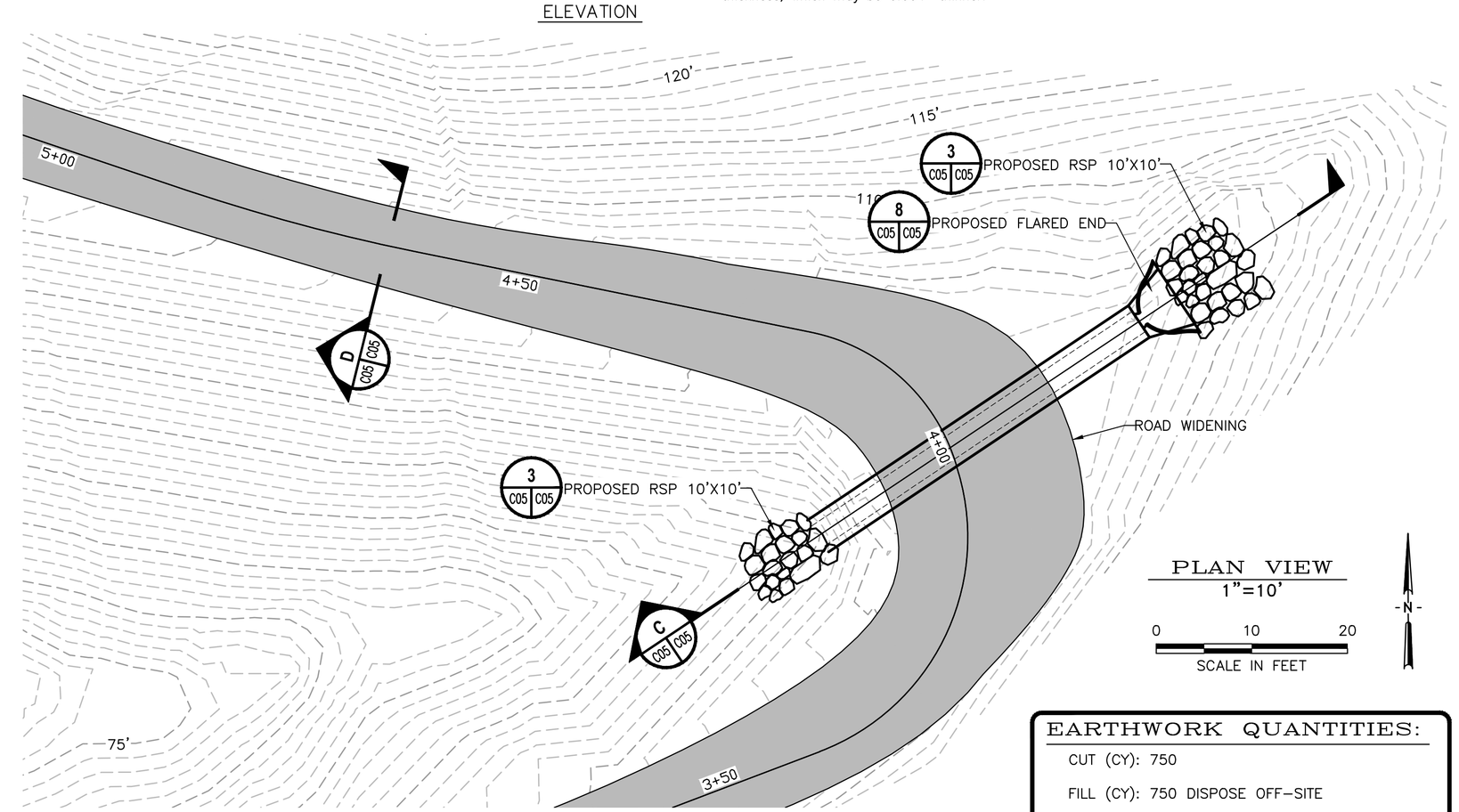

PLAN VIEW
1"=10'
0 10 20
SCALE IN FEET
-N-

EARTHWORK QUANTITIES:

CUT (CY): 750

FILL (CY): 750 DISPOSE OFF-SITE

NOTE:
CUT AND FILL QUANTITIES ONSITE TO BE PERMANENT

TVCE
67 WALNUT WAY
PO BOX 1567
WEED, CA 96573
PHONE (530) 629-3000
FAX (530) 629-3011

REV	DATE	DESCRIPTION	DWN BY	DES BY	CHK BY	APP BY
A	6/30/16	PRELIMINARY DESIGN	EEK	JTM	JTM	TVCE

YUROK TRIBE PLANNING DEPARTMENT
KLAMATH WATER TANK

GRADING PLAN

KLAMATH, DEL NORTE COUNTY, CALIFORNIA

DRAWN BY: E. KEYES
DESIGNED BY: JTM
CHECKED BY: J. McKNIGHT
APPROVED BY: TVCE

DATE OF ISSUE: JUNE 2016
SCALE: AS SHOWN
PROJECT NO: 484
DRAWING NO: C05.0

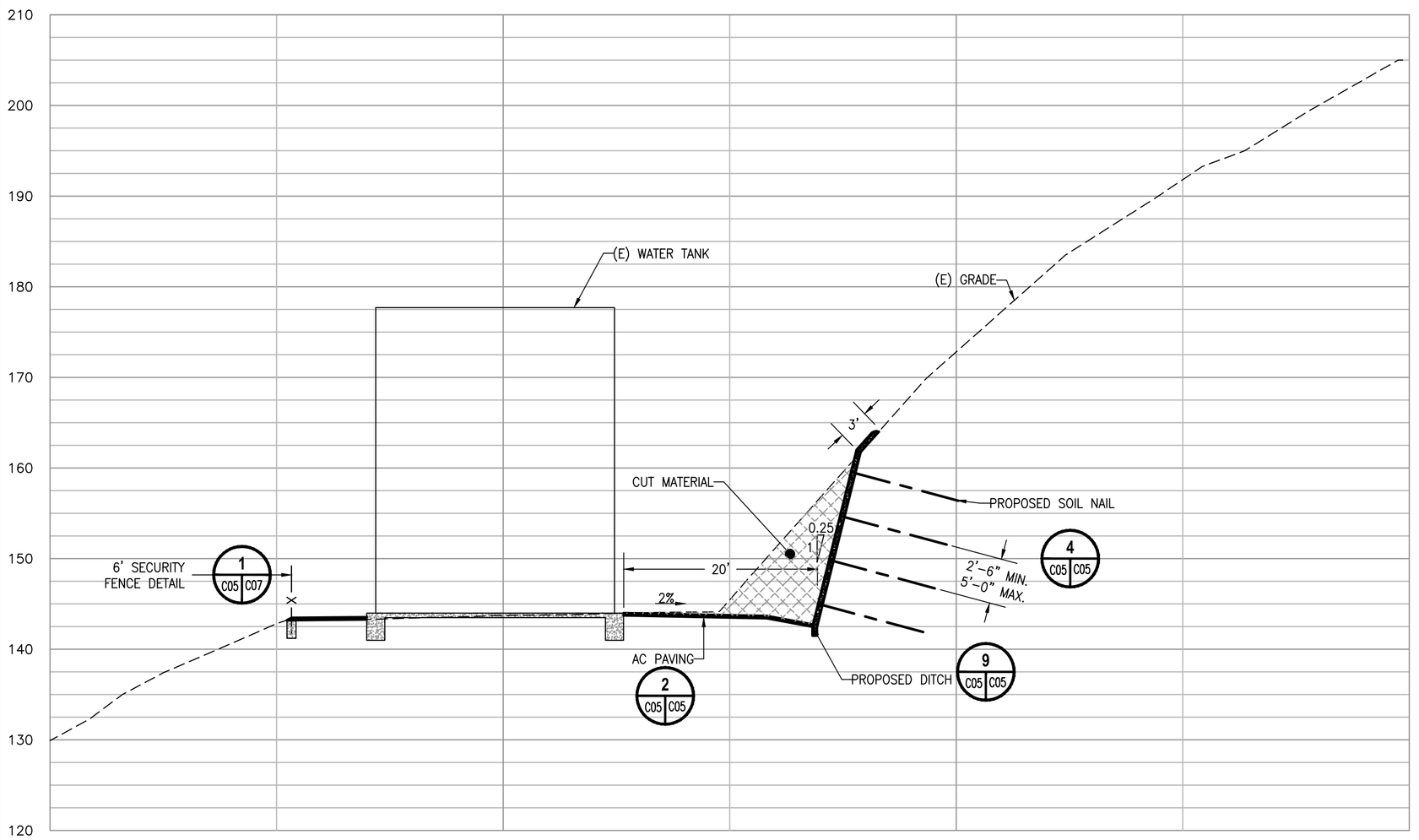

SECTION A C05 C05
1"=10'

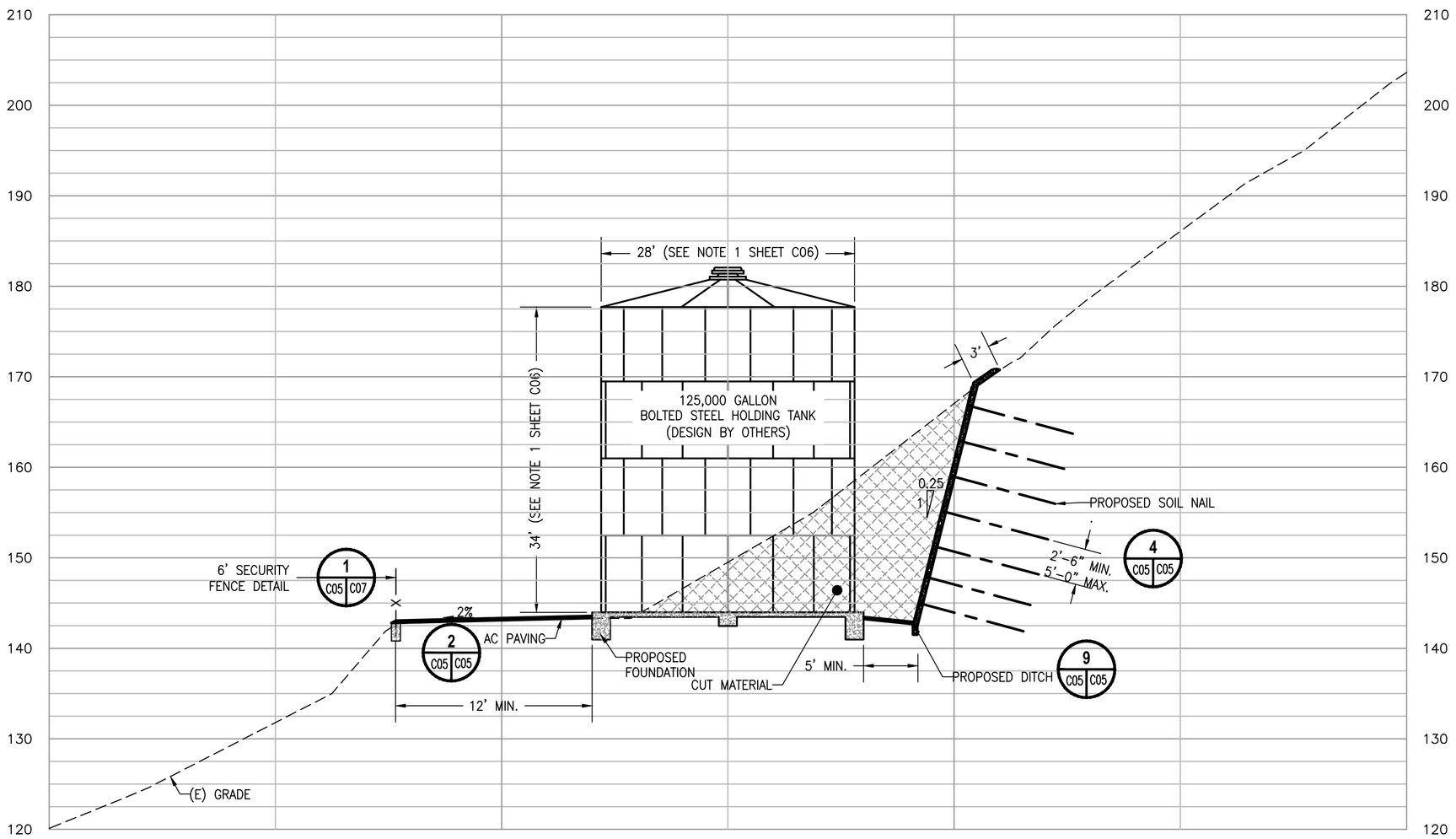

SECTION B C05 C05
1"=10'

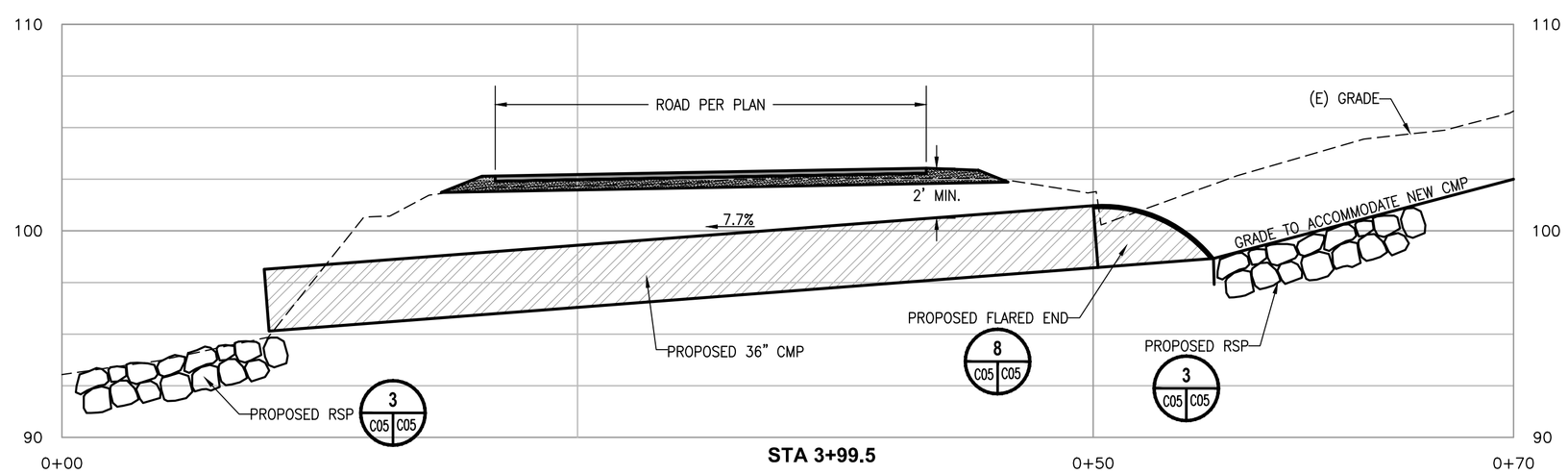

STA 3+99.5

SECTION C C05 C05
1"=5'

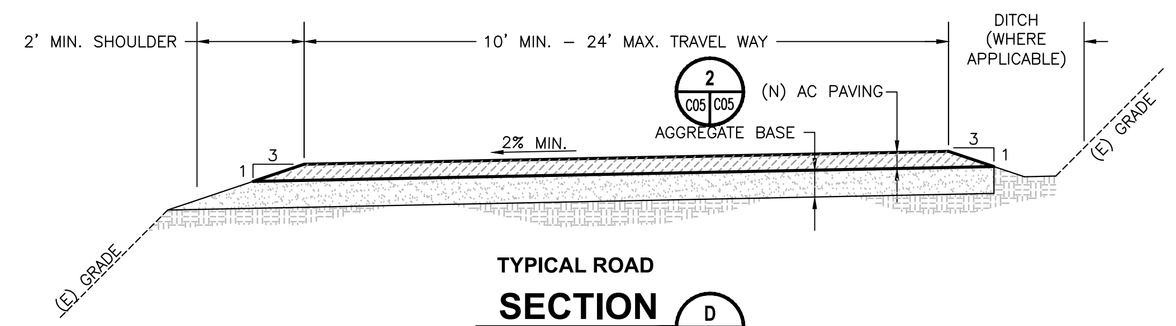

TYPICAL ROAD

SECTION D C05 C05
1"=2'

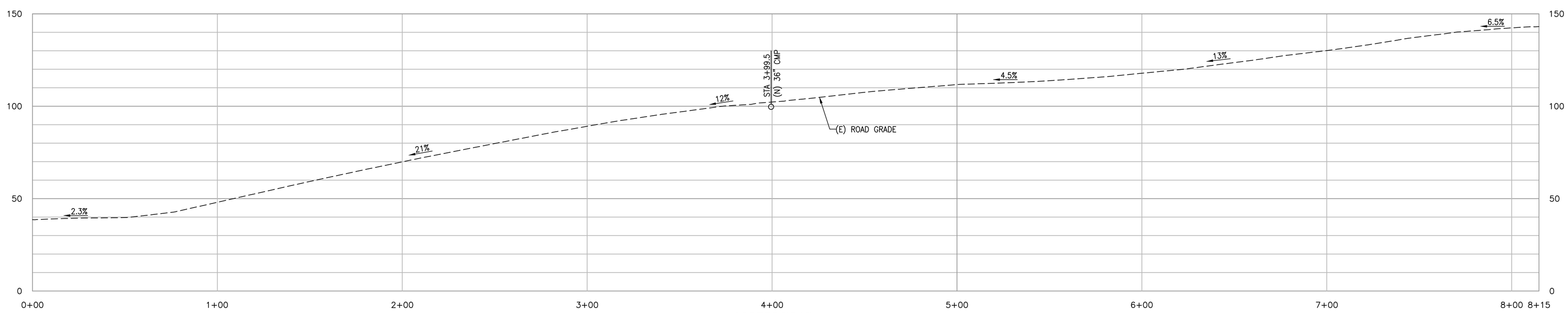

ACCESS ROAD

PROFILE 1 C05 C05
1"=10'

TVCE
67 WALNUT WAY
PO BOX 1567
WILLOW CREEK, CA 95573
PHONE (530) 629-3000
FAX (530) 629-3011

REV	DATE	DESCRIPTION	DWN BY	DES BY	CHK BY	APP BY
1	6/30/16	PRELIMINARY DESIGN	EEK	JTM	JTM	TVCE

YUROK TRIBE PLANNING DEPARTMENT
KLAMATH WATER TANK

SITE SECTIONS

KLAMATH, DEL NORTE COUNTY, CALIFORNIA

DRAWN BY: E. KEYES
DESIGNED BY: JTM
CHECKED BY: J. McKNIGHT
APPROVED BY: TVCE

DATE OF ISSUE: JUNE 2016
SCALE: AS SHOWN
PROJECT NO: 484
DRAWING NO: C05.1

TRINITY VALLEY CONSULTING ENGINEERS, INC.

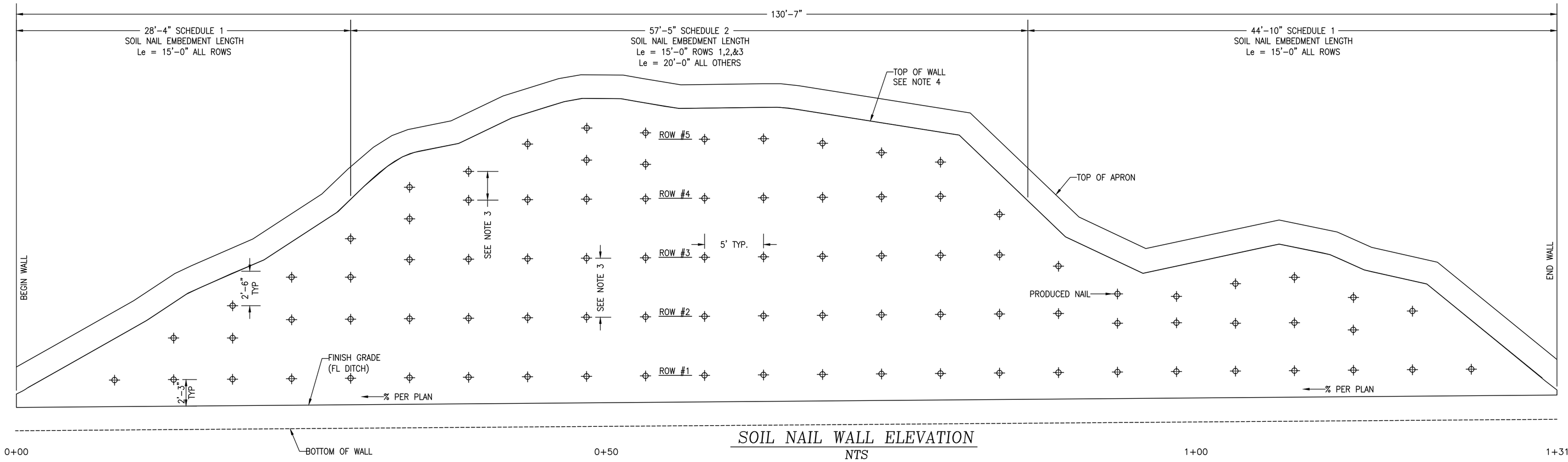

SOIL NAIL WALL ELEVATION

NTS

SOIL NAIL INSTALLATION NOTES

1. SOIL NAILS SHALL BE DRILLED PERPENDICULAR IN PLAN VIEW TO SHOTCRETE FACE, EXCEPT AS NEEDED TO AVOID TUNNEL ZONE.
2. DIMENSIONS SHOWN ARE TYPICAL.
3. SOIL NAILS SHALL CONSIST OF GRADE 75 STEEL EPOXY COATED BARS AND FULLY CEMENT GROUTED.
4. GROUT MIX SHALL NOT EXCEED 4.75 GALLONS OF WATER PER SACK OF CEMENT (94 LBS). IF A STIFFER MIX CAN BE PUMPED, 4.5 GALLONS OF WATER SHALL BE USED.
5. SOIL NAIL MATERIALS, INSTALLATION, AND GROUTING SHALL CONFORM WITH PROJECT SOIL NAIL SPECIFICATIONS.
6. PREFABRICATED BACK DRAINAGE STRIPS SHALL CONSIST OF WAFFLE-TYPE DRAINAGE MATERIAL (AKWADRAIN OR APPROVED EQUAL). EXTEND DOWN FROM 1'-0" BELOW FINISH GRADE BEHIND THE TOP OF THE WALL AND BE CENTERED VERTICALLY BETWEEN SOIL NAIL ASSEMBLIES.
7. SHOTCRETE SHALL HAVE A MINIMUM COMPRESSIVE STRENGTH OF 4,000 PSI AT 28 DAYS.
8. SHOTCRETE SURFACE FINISH SHALL BE A GUN FINISH WITH NO CONTRACTION JOINTS. THE FINISH SHALL CONFORM TO PROJECT SPECIFICATION. FINAL COLOR TO BE DETERMINED BY THE OWNER.
9. EXCAVATIONS AND SUPPORT INSTALLATION SHALL BE PERFORMED IN LIFTS, AS REQUIRED TO COMPLY WITH APPLICABLE OSHA REGULATIONS (CALIFORNIA CONSTRUCTION SAFETY ORDER, TITLE 8) AND GEOGRAPHICAL RECOMMENDATIONS OF ANY REPORT THAT ACCOMPANIES THESE DRAWINGS. ANY EXTRA WORK AND/OR MATERIALS FOR REPAIRS WHEN NOT IN COMPLIANCE SHALL BE THE RESPONSIBILITY OF THE CONTRACTOR.
10. ALL SITE WORK SHALL BE PERFORMED IN ACCORDANCE WITH THESE DRAWINGS, THE REFERENCED SPECIFICATIONS, 2013 CBC, AND THE RECOMMENDATIONS OF THE ENGINEER DURING CONSTRUCTION.
11. SPECIAL INSPECTION AND APPROVAL BY ENGINEER OF SOIL NAIL INSTALLATION, GROUTING, REINFORCEMENT, SHOTCRETE, AND SUBSURFACE DRAINAGE IS REQUIRED.

SOIL NAIL NOTES

1. PROOF TEST SOIL NAILS TO BE DETERMINED BY THE ENGINEER.
2. THE SOIL NAILS SHALL BE SPACED VERTICALLY AT MINIMUM 2'-6" TO MAXIMUM 5'-0".
3. CONCRETE BARRIER NOT SHOWN.
4. TOP OF WALL SPOT ELEVATIONS ARE APPROXIMATE AND SHALL BE VERIFIED IN THE FIELD. TOP OF WALL PROFILE SHALL BE A PARABOLIC CURVE BETWEEN GIVEN ELEVATIONS.

SOIL NAIL SCHEDULE NOTES

1. NAIL INSTALLED @ 15° DOWN FROM HORIZONTAL AVOID INTERFERENCE WITH TUNNEL. ROWS DIRECTLY ABOVE TUNNEL SHALL BE 12 FEET LONG AND INCLINED AT 0° TO 5° DOWN TO AVOID INTERSECTING TUNNEL.
2. HOLES ADJUSTED TO AVOID INTERESTING THE TUNNEL AND INCLINED LESS THAN 5° DOWN, SHALL BE FILLED WITH DRY PACK CEMENT AT THE COLLAR PRIOR TO GROUTING. A 1/2" DIAMETER GROUT INSERTION TUBE SHALL BE PLACED AT THE BOTTOM OF THE HOLE. A GROUT RETURN TUBE SHALL BE PLACED AT THE COLLAR TO ENSURE PROPER GROUTING OF THE HOLE.
3. SCHEDULED SOIL NAIL LENGTHS ARE FROM THE EXCAVATED GROUND SURFACE TO END OF BAR. DRILL HOLE SHOULD EXTEND AT LEAST 12" BEYOND END OF BAR.
4. Fy>75ksi, EPOXY COATED No. 8 BARS MINIMUM.

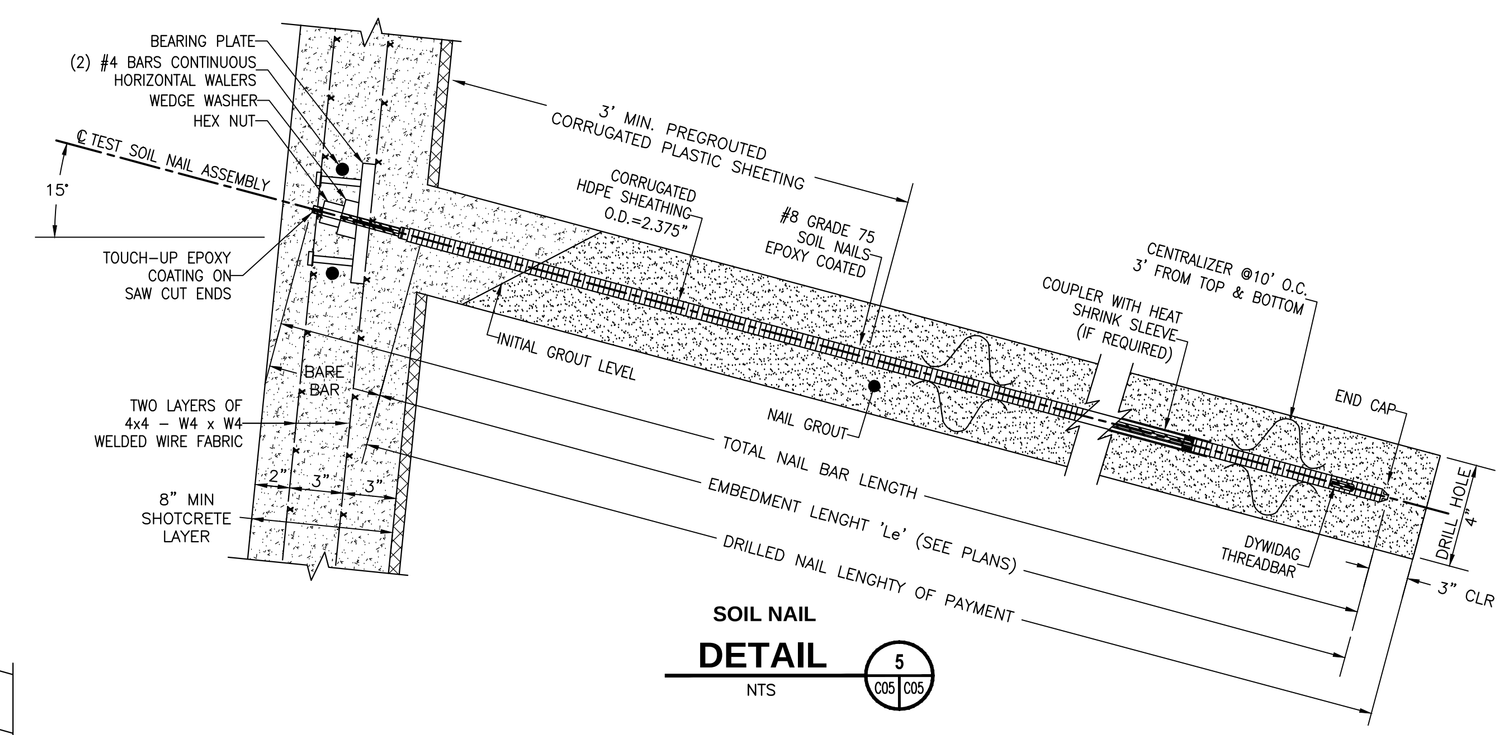

SOIL NAIL
DETAIL 5 C05 C05
NTS

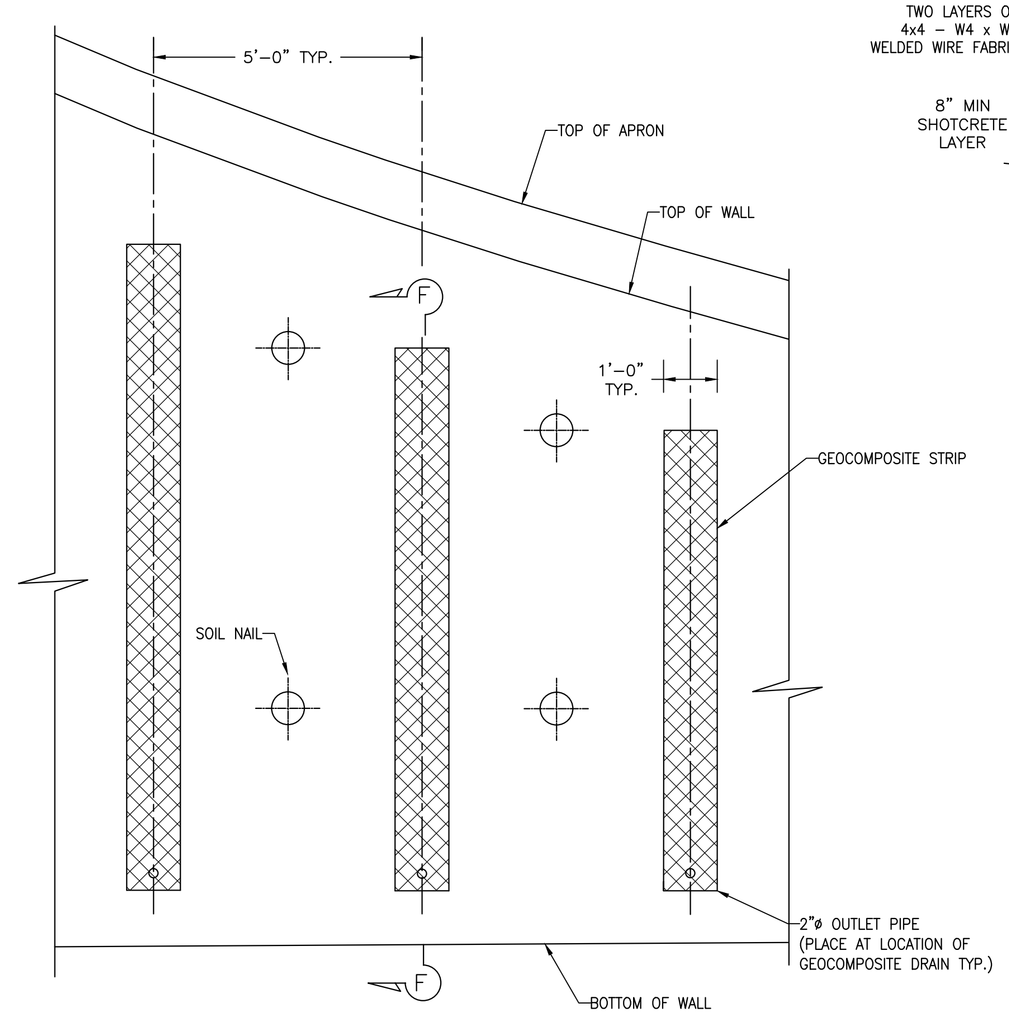

WALL PART
ELEVATION 4 C05 C05
NTS

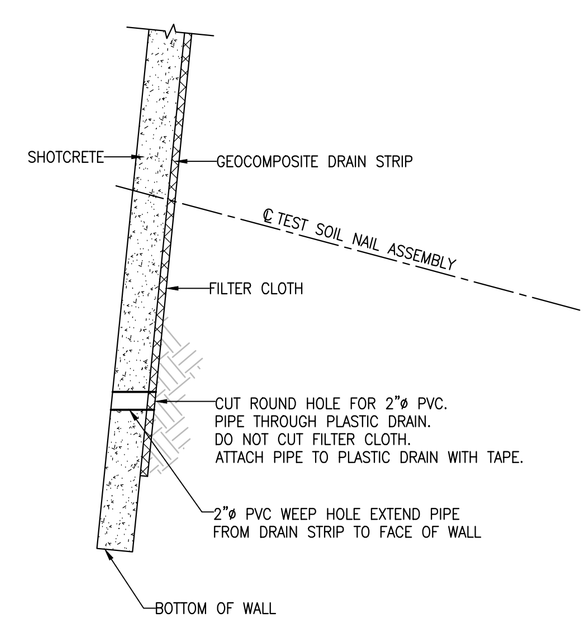

WALL DRAIN
SECTION F C05 C05
NTS

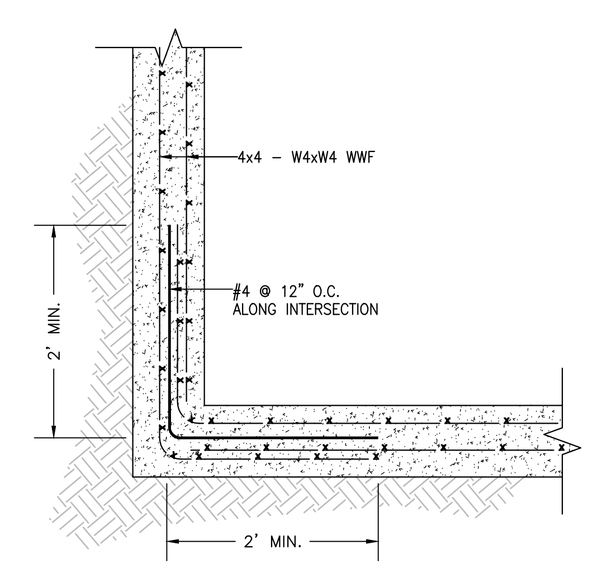

INSIDE CORNER WALL
DETAIL 6 C05 C05
NTS

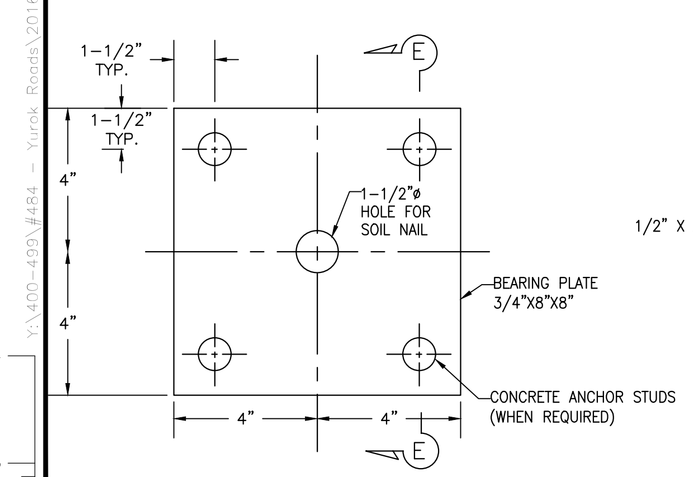

BEARING PLATE
DETAIL 7 C05 C05
NTS

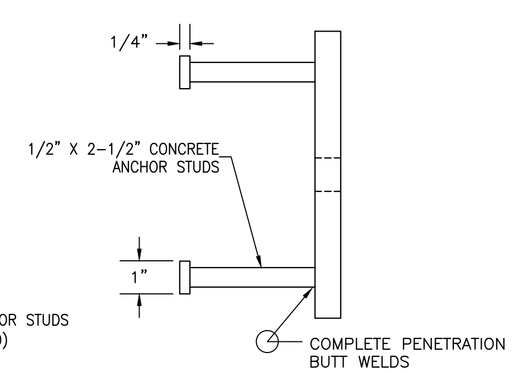

BEARING PLATE
SECTION E C05 C05
NTS

TVCE
67 WALNUT WAY
PO BOX 1567
WILLOW CREEK, CA 95573
PHONE (530) 629-3000
FAX (530) 629-3011

REV	DATE	DESCRIPTION	DWN BY	DES BY	CHK BY	APP BY
1	6/30/16	PRELIMINARY DESIGN	EEK	FAM	JTM	TVCE

YUROK TRIBE PLANNING DEPARTMENT
KLAMATH WATER TANK

GRADING DETAILS

KLAMATH, DEL NORTE COUNTY, CALIFORNIA

DRAWN BY: E. KEYES
DESIGNED BY: F. MASTEN
CHECKED BY: J. McKNIGHT
APPROVED BY: E. HILLMAN

DATE OF ISSUE: JUNE 2016
SCALE: AS SHOWN
PROJECT NO: 484
DRAWING NO: C05.2

TRINITY VALLEY CONSULTING ENGINEERS, INC.

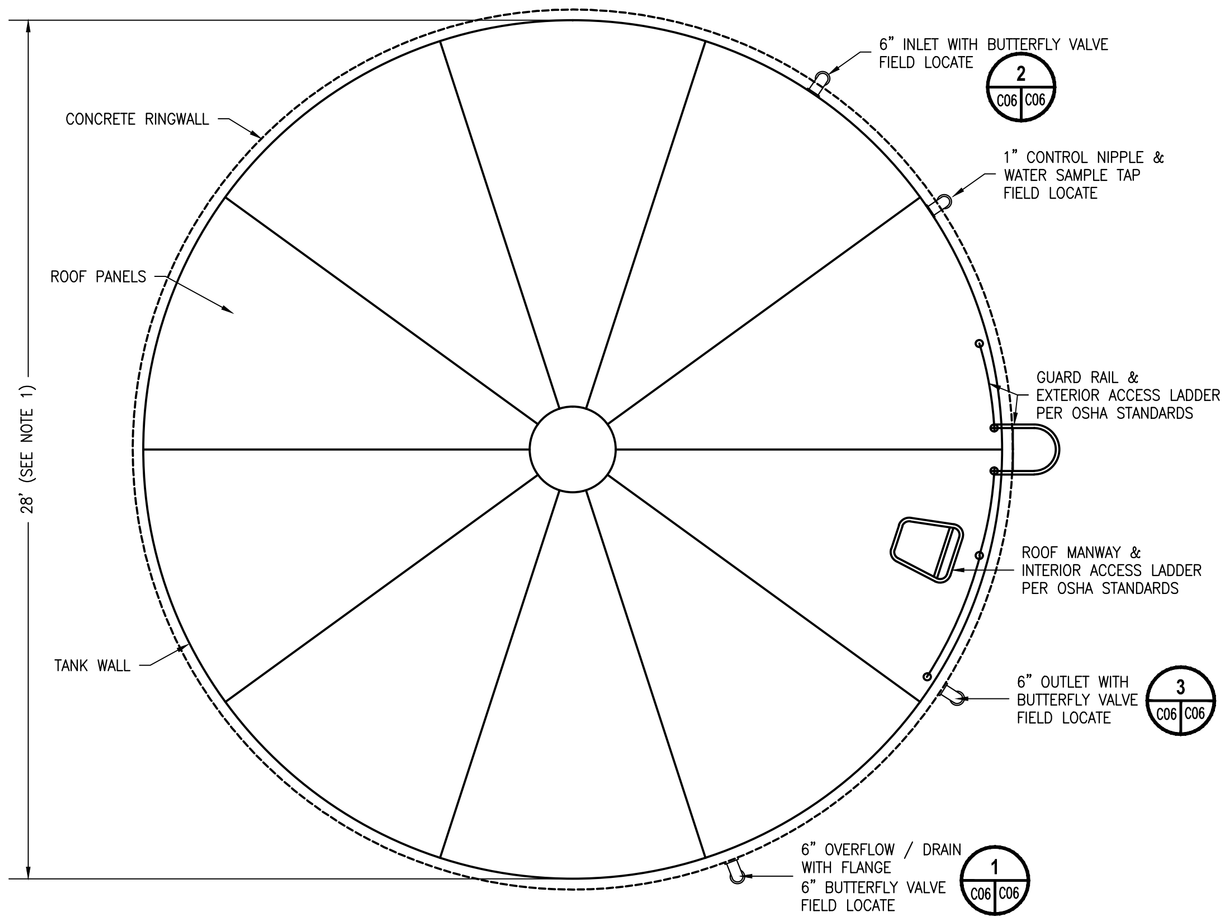

PLAN VIEW

NTS

NOTES:

1. DIMENSIONS ARE APPROXIMATE, PROVIDE STANDARD TANK WITH MINIMUM 125,000 GALLON WORKING CAPACITY (BETWEEN OUTLET INVERT AND OVERFLOW INLET).
2. CONTRACTOR TO SUBMIT TANK PLANS FOR APPROVAL ACCORDING TO THE JOB SPECIFICATIONS.
3. CONNECTION PIPING AND CONTROLS NOT SHOWN IN ELEVATION VIEW FOR CLARITY.
4. PROVIDE TANK CONNECTION FOR LEVEL TRANSMITTER.
5. TYPICAL FOUNDATION IS SHOWN. PROVIDE FOUNDATION PER MANUFACTURER'S RECOMMENDATIONS AND SOILS REPORT.
6. ALL PIPE TO BE D.I. ABOVE GROUND AND PVC C-900 BELOW GROUND.
7. TANK FLOOR METAL TO BE 8 GA MIN.
8. ALL INTERIOR AND EXTERIOR BOLTS AND TANK PANELS TO BE EPOXY COATED OR CAPPED.
9. FINISH TANK WATER LEVEL SHALL BE THE SAME AS EXISTING WATER TANK. CONTRACTOR TO VERIFY EXISTING WATER TANK LEVEL.
10. PIPE CONNECTIONS FROM TANK TO UNDERGROUND REQUIRE FLEXIBLE SEISMIC COUPLING.
11. PROVIDE THRUST BLOCKS AND/OR GRIP RINGS AS SHOWN OR AS DIRECTED.

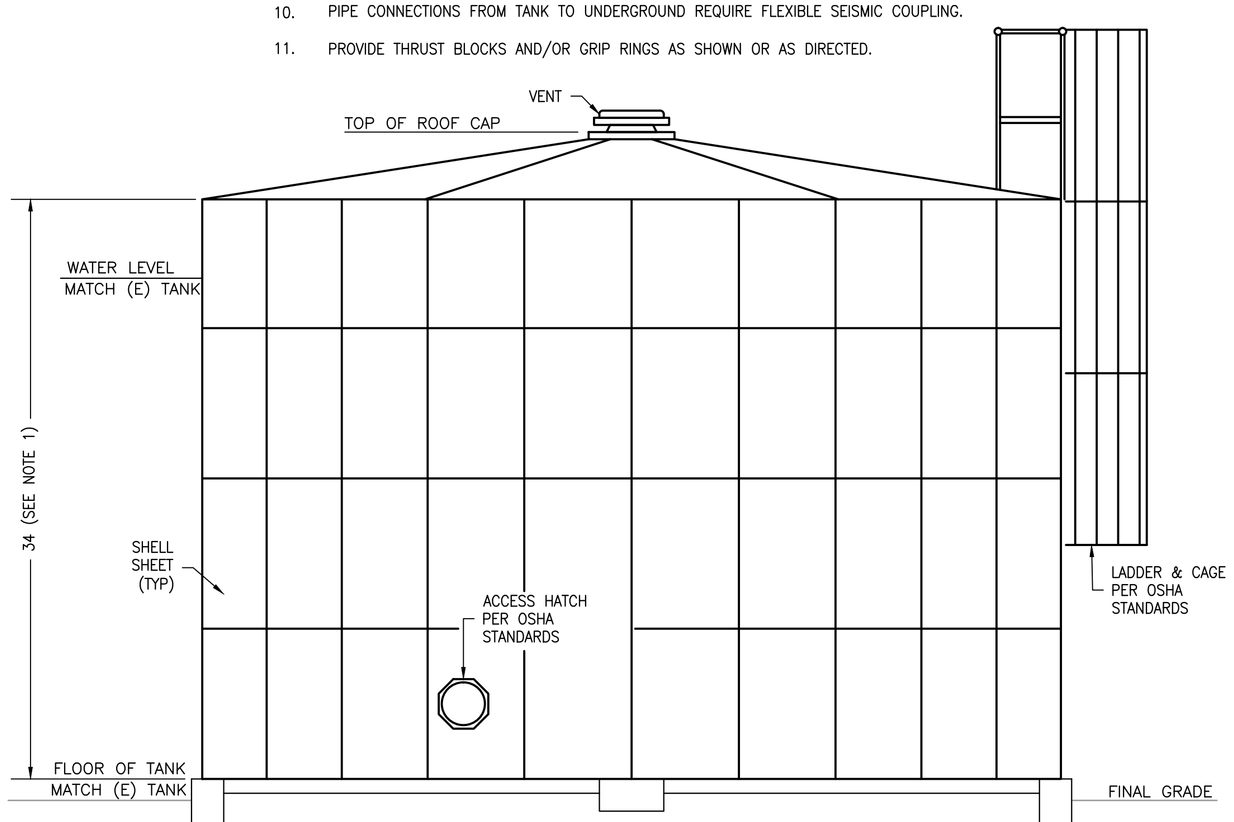

ELEVATION VIEW

NTS

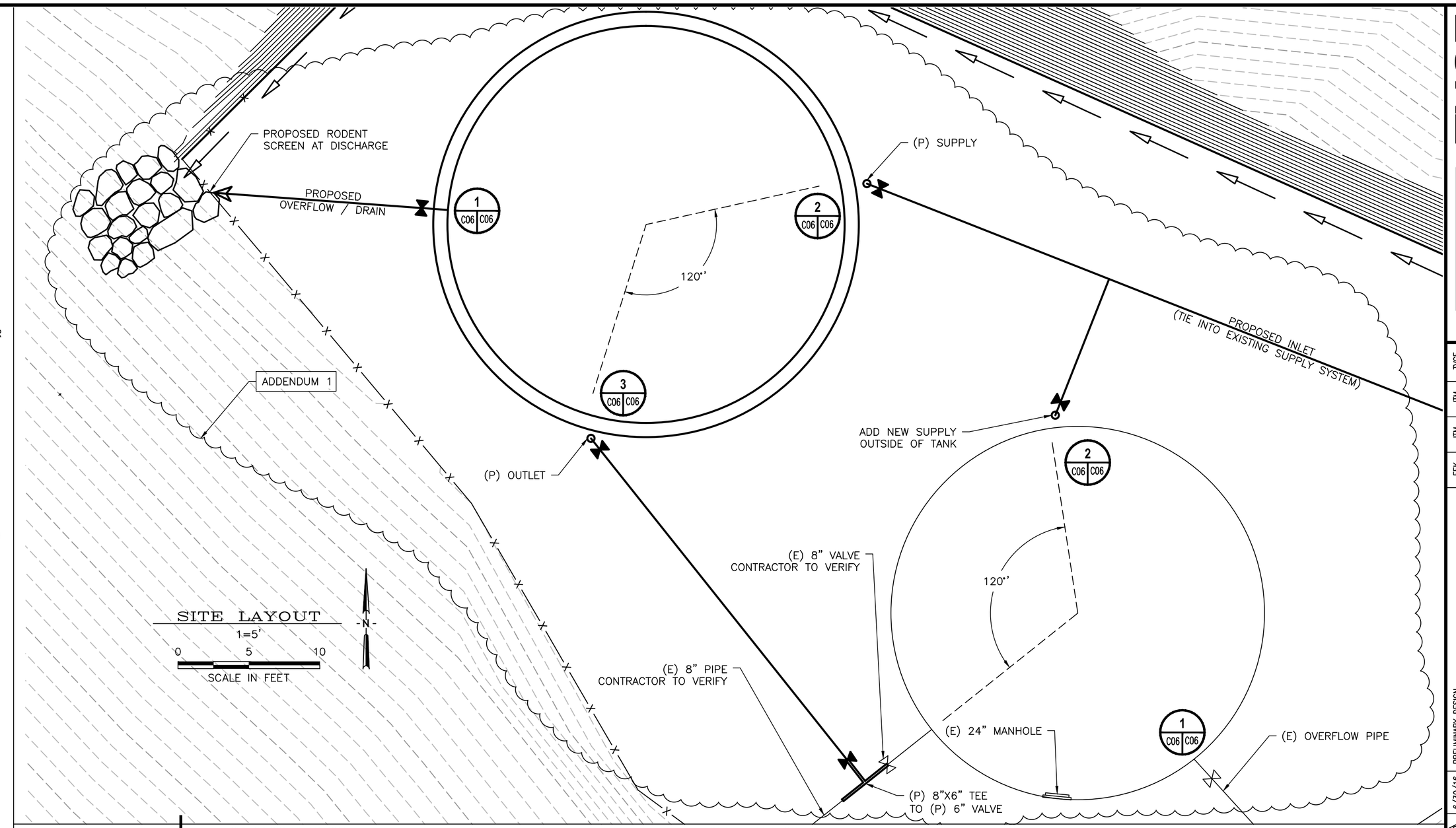

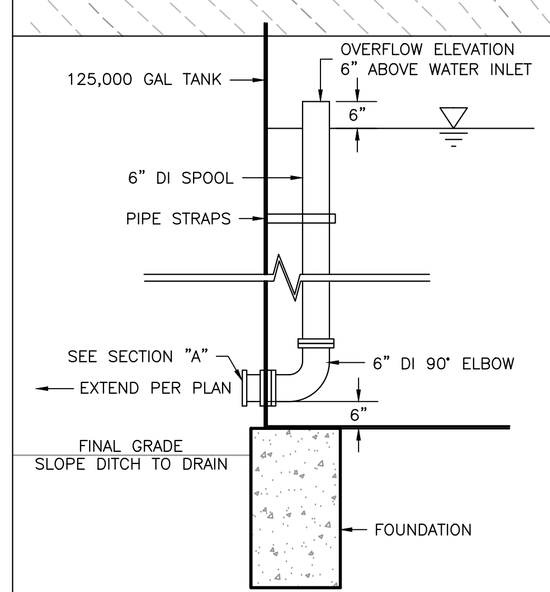

OVERFLOW/ DRAIN PIPING

DETAIL 1 (C06 C06)

1-2'

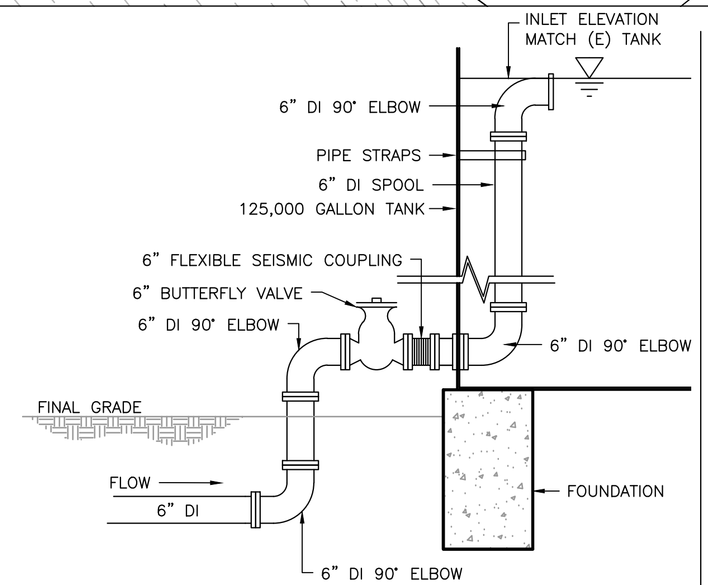

INLET PIPING

DETAIL 2 (C06 C06)

1-2'

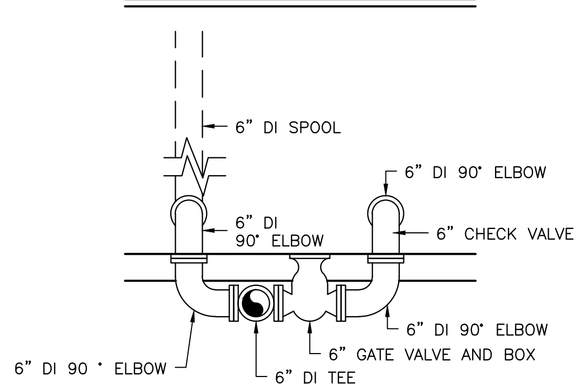

OVERFLOW/ DRAIN PIPING

SECTION A (C06 C06)

1-2'

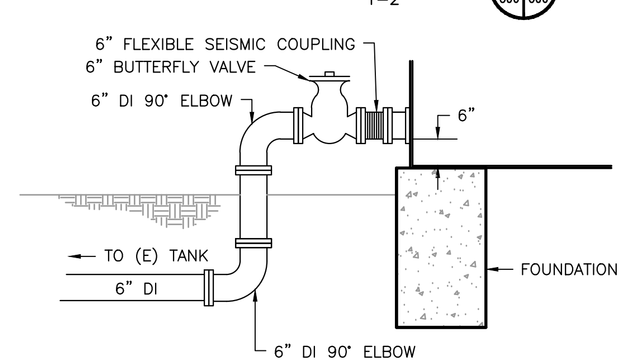

OUTLET PIPING

DETAIL 3 (C06 C06)

1-2'

WATER NOTES:

1. ALL WORK AND MATERIALS SHALL BE IN ACCORDANCE WITH THE LATEST EDITION OF AWWA STANDARDS UNLESS OTHERWISE SHOWN OR DESCRIBED ON THESE PLANS.
2. THE CONTRACTOR SHALL NOTIFY THE KLAMATH COMMUNITY SERVICE DISTRICT (KCSD) FIVE (5) WORKING DAYS IN ADVANCE OF BEGINNING WORK.
3. PLANS SHALL BE RESUBMITTED FOR APPROVAL IF CONSTRUCTION OF WATER FACILITIES HAS NOT BEGUN WITHIN ONE (1) YEAR AFTER THE APPROVAL DATE OF THESE IMPROVEMENT PLANS.
4. ALL WORK SHALL BE INSPECTED BY THE KCSD PRIOR TO BACKFILLING.
5. THE CONTRACTOR SHALL NOTIFY THE KCSD IN CASE OF AN EMERGENCY.
6. THE CONTRACTOR SHALL NOTIFY THE KCSD FIVE (5) DAYS PRIOR TO SCHEDULED CONNECTION TO THE EXISTING WATER SYSTEM SO THE INSPECTOR CAN ARRANGE FOR CLOSURE OF VALVES AND CUSTOMER NOTIFICATION OF SHUT DOWN. THE KCSD WILL ARRANGE FOR CLOSURE OF VALVES, AND CUSTOMER NOTIFICATIONS OF SHUTDOWN. THE CONTRACTOR IS PROHIBITED FROM OPERATING ANY VALVES WITHOUT EXPRESS WRITTEN PERMISSION FROM THE KCSD.
7. THE CONTRACTOR SHALL DISINFECT AND FLUSH THE NEW WATER SYSTEM PRIOR TO CONNECTING TO THE EXISTING WATER SYSTEM PER AWWA 605.
8. SERVICE CONNECTIONS TO AN EXISTING WATER MAIN, OR TO AN EXTENSION OF AN EXISTING WATER MAIN, SHALL BE MADE BY THE CONTRACTOR. THE CONTRACTOR SHALL SCHEDULE AND PROCEED WITH THE SERVICE CONNECTION WITHOUT DELAY AND WITH MINIMUM INTERFERENCE TO EXISTING WATER AND FIRE SERVICES. THE CONTRACTOR SHALL NOTIFY THE KCSD AND SCHEDULE FOR INSPECTION FIVE (5) DAYS IN ADVANCE.
9. VALVES THREE INCHES (3") AND LARGER PLACED AT TEES, CROSSES, ELBOWS, AND REDUCERS SHALL BE FLANGED AND BOLTED TO THE FITTINGS.
10. PIPE JOINTS WILL NOT BE ALLOWED WITHIN SIX FEET (6') OF A VALVE, FITTING OR HYDRANT. DEFLECTION OF PIPE WILL NOT BE ALLOWED WITHIN TEN FEET (10') OF ANY FITTING OR VALVE.
11. STANDARD PIPE LENGTHS (MINIMUM EIGHTEEN (18) TO TWENTY (20) FEET) SHALL BE USED FOR ALL HORIZONTAL AND VERTICAL DEFLECTIONS.
12. BUTTERFLY VALVES SHALL BE MANUFACTURED BY DEZURIK, PRATT, MUELLER, OR APPROVED EQUAL.
14. ALL ELBOWS, TEES, CROSSES, REDUCERS, BLOW-OFFS, DEAD ENDS, AND VALVES SHALL BE RESTRAINED TO PREVENT MOVEMENT WHEN PRESSURIZED. RESTRAINTS SHALL BE INSTALLED WHETHER SHOWN ON PLANS AND DETAILS OR NOT. VALVES SHALL BE TREATED AS BI-DIRECTIONAL DEAD-ENDS WHEN DETERMINING REQUIRED RESTRAINED LENGTHS. THE TYPE OF RESTRAINT SHALL BE THRUST BLOCKS OR JOINT RESTRAINING DEVICES, AS HEREINAFTER SPECIFIED. JOINT RESTRAINING DEVICES SHALL BE USED AT ALL OTHER LOCATIONS, WHERE UTILITY CONFLICTS DO NOT LEAVE ROOM FOR THRUST BLOCKS, OR WHERE SPECIFIED. JOINT RESTRAINING DEVICES SHALL BE INSTALLED IN ALL PUSH ON AND MECHANICAL JOINTS WITHIN THE SPECIFIED "RESTRAINED LENGTH". THE "RESTRAINED LENGTH" SHALL COMPLY WITH NOTES ON THE PLANS, OR STANDARD DRAWINGS, WHICHEVER IS LONGER. IN THE EVENT THAT NO "RESTRAINED LENGTH" IS SPECIFIED, THE CONTRACTOR SHALL OBTAIN THE REQUIRED "RESTRAINED LENGTH" FROM THE ENGINEER.
15. JOINT RESTRAINING DEVICES FOR MECHANICAL JOINTS SHALL BE EBBA MEGALUG 1100, OR STAR PIPE PRODUCTS' STARGRIP 3000 FOR DUCTILE IRON PIPE; AND EBAA MEGALUG 2000PV, OR STAR PIPE PRODUCTS' ALLGRIP 3600, FOR PVC PIPE; OR APPROVED EQUAL BY THE KCSD. ONLY DUCTILE IRON PIPE SHALL BE USED WHEN RESTRAINING PUSH-ON JOINTS. PUSH-ON RESTRAINTS SHALL BE US PIPE FIELD LOCK GASKETS, OR US PIPE TR FLEX PIPE, OR APPROVED EQUAL BY THE KCSD. OUTSIDE THE BELL RESTRAINING DEVICES AND RESTRAINED PVC PUSH-ON JOINTS WILL NOT BE ALLOWED. THE PIPE LENGTH FROM THE RESTRAINED FITTING OR VALVE SHALL BE A MINIMUM OF 18-FEET, UNLESS OTHERWISE SPECIFIED.
16. THREE (3) SETS OF "AS-BUILT" PLANS SHALL BE SUBMITTED TO THE KCSD, PRIOR TO ACCEPTANCE OF THE WATER SYSTEM BY THE KCSD. ALL SHEETS SHALL BE STAMPED "RECORD DRAWING" OR "AS-BUILT"

TVCE
67 WALNUT WAY
PO BOX C06656
WEAVERVILLE, CA 95573
PHONE (530) 629-3000
FAX (530) 629-3000C06

REV	DATE	DESCRIPTION	DWN BY	DES BY	CHK BY	APP BY
1	6/30/16	PRELIMINARY DESIGN	EEK	JTM	JTM	TVCE
2	9/1/16	ADDENDUM 1 PIPING	EEK	JTM	JTM	TVCE

YUROK TRIBE PLANNING DEPARTMENT
KLAMATH WATER TANK

UTILITY PLAN

KLAMATH, DEL NORTE COUNTY, CALIFORNIA

DRAWN BY: F. MASTEN
DESIGNED BY: J. MCKNIGHT
CHECKED BY: J. MCKNIGHT
APPROVED BY:

DATE OF ISSUE: JUNE 2016

SCALE: AS SHOWN

PROJECT NO: 484

DRAWING NO: C06.0

TRINITY VALLEY CONSULTING ENGINEERS, INC.

\\Tvceserver\d\TVCE\Projects\400-499\#484 - Yurok Roads\2016\484.20_Klamath Water Tank\dwg\06.0_UTILITY_REV1.dwg, 9/2/2016 8:22:35 AM, ARCH full bleed D (24.00 x 36.00 inches), 1:1, tvce, tvce

C06/2" 0" 1

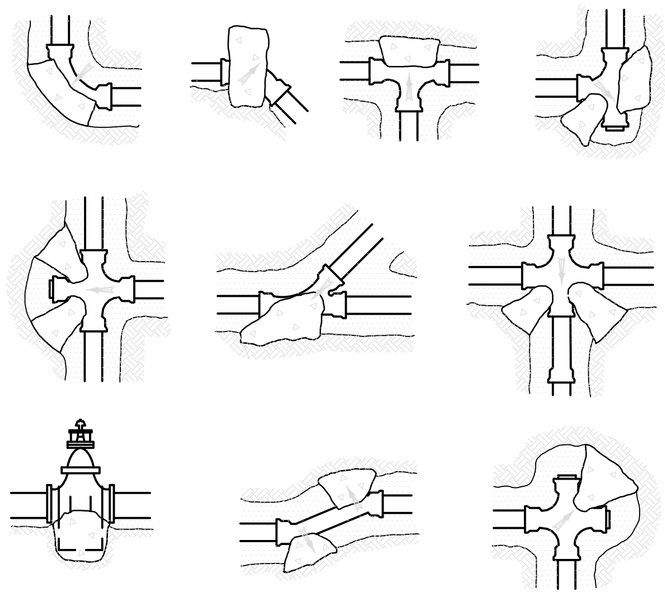

LOCATION OF THRUST BLOCKS

NTS

TABLE I THRUST(T) AT FITTINGS, IN POUNDS AT 100 PSI WATER PRESSURE					
PIPE SIZE	TEE OR DEAD END	90° BEND	45° BEND	22 1/2° BEND	11 1/4° BEND
1 1/2"	284	401	217	111	56
2"	443	627	339	173	87
2 1/2"	649	918	497	253	127
3"	962	1361	736	375	189
4"	1810	2559	1385	706	355
6"	3739	5288	2862	1459	733
8"	6433	9097	4923	2510	1261
10"	9677	13685	7406	3776	1897
12"	13685	19353	10474	5340	2683
14"	18385	26001	14072	7174	3604
16"	23779	33628	18199	9278	4661

TABLE II SAFE BEARING LOADS (B)	
SOIL	SAFE BEARING LOAD, POUNDS PER SQ. FT.
SOUND SHALE	10000
CEMENTED SAND AND GRAVEL	4000
COARSE AND FINE COMPACTED SAND	3000
MEDIUM CLAY (CAN BE SPADED)	2000
SOFT CLAY	1000
MUCK	0

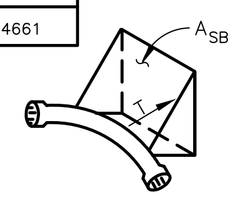

$$A_{SB} = \frac{T}{B} \times \frac{PT}{100}$$

WHERE:

A_{SB} = AREA OF BLOCK BEARING AGAINST UNDISTURBED TRENCH MATERIAL IN SQ. FT.

T = THRUST FACTOR FROM TABLE I IN POUNDS AT 100 PSI

B = SAFE BEARING LOAD FROM TABLE II IN POUNDS/SQ. FT.

PT = PRESSURE USED FOR PIPELINE TEST IN PSI

THRUST BLOCK SIZING

NOT TO SCALE

THRUST BLOCK NOTES:

1. THRUST BLOCKS SHALL BE CONSTRUCTED SO THAT MAJOR BEARING SURFACE IS IN DIRECT LINE WITH THE MAJOR FORCE CREATED BY THE PIPE OR FITTINGS.
2. ALL CONCRETE SHALL BE CLASS 470-C-2500 PER "GREENBOOK".
3. CONCRETE SHALL BE FLUID ENOUGH SO THAT IT MAY BE WORKED AROUND THE FITTINGS. A DOUBLE LAYER OF 6 MIL POLYETHYLENE FILM SHALL BE PLACED BETWEEN CONCRETE AND METAL FITTINGS.
4. CONCRETE SHALL BE KEPT BEHIND THE BELL OF THE FITTINGS.
5. ALL THRUST BLOCKS FOR PIPES LARGER THAN 12" SHALL BE ENGINEERED.
6. A CONCRETE PAD SHALL BE PLACED UNDER ALL VALVES 12" AND LARGER FOR SUPPORT.
7. ALL ANCHOR BLOCKS SHALL BE CONSTRUCTED WITH A MINIMUM OF (2) #4 REBAR STRAPS.

THRUST BLOCK

DETAIL 1 C06 C06

NTS

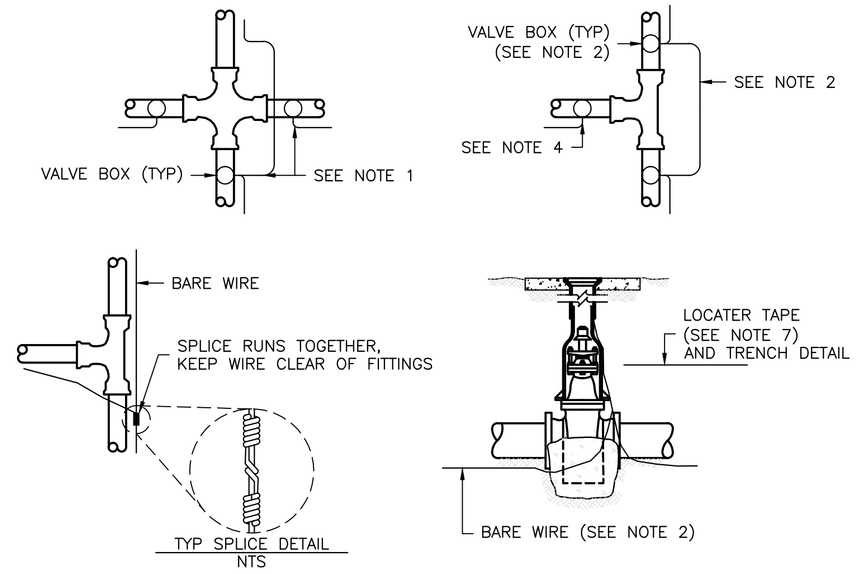

LOCATING WIRE AND WARNING TAPE

DETAIL 2 C06 C06

NTS

LOCATING WIRE AND WARNING TAPE NOTES:

1. WIRE SHALL BE CONTINUOUS BETWEEN VALVE BOXES, EXCEPT WHERE BOXES ARE WITHIN TEN (10) FEET OF PIPE INTERSECTION.
2. BARE WIRE SHALL NOT TOUCH VALVES OR FITTINGS.
3. LOCATING WIRE SHALL BE PLACED AT BOTTOM OF TRENCH, NEXT TO PIPE. (DO NOT ATTACH WIRE TO PIPE).
4. IF WIRE ENDS AT A VALVE, A SINGLE INSULATED WIRE SHALL EXTEND UP TO WITHIN 12" OF BOX COVER.
5. ALL VALVES, INCLUDING FIRE HYDRANT VALVES, SHALL HAVE LOCATING WIRES.
6. LOCATING WIRE SHALL BE BARE #6 AWG SOLID COPPER, SOFT DRAWN WIRE. WIRE SHALL BE INSTALLED WITH ALL NON-METALLIC MAINS AND SERVICES.
7. WARNING TAPE SHALL BE A DETECTABLE METALLIZED 2" WIDE WARNING TAPE, BLUE COLOR CODED, IMPRINTED WITH "CAUTION-BURIED WATER LINE BELOW" SHALL BE INSTALLED 12" ABOVE ALL WATER MAINS IN OFF ROAD INSTALLATIONS. LINEGUARD DETECTABLE MARKING TAP, TYPE III OR APPROVED EQUAL.

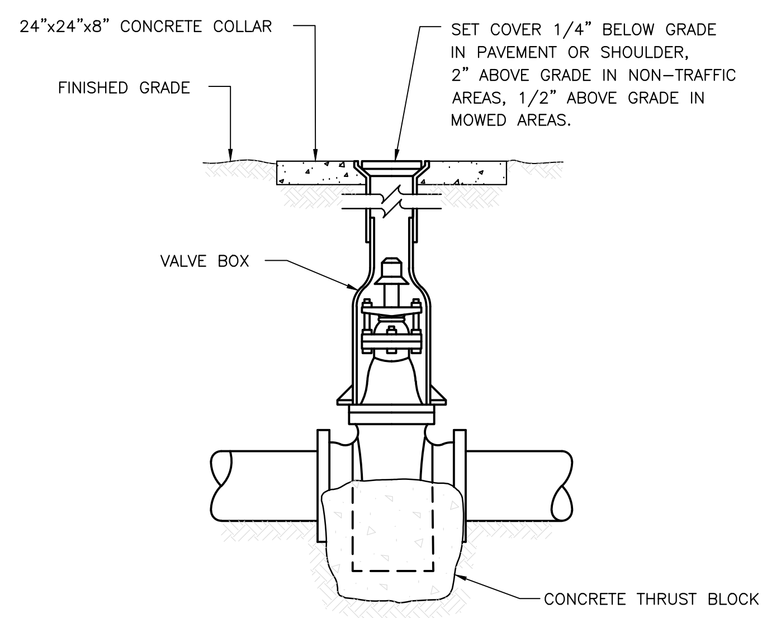

TYPICAL GATE VALVE

DETAIL 3 C06 C06

NTS

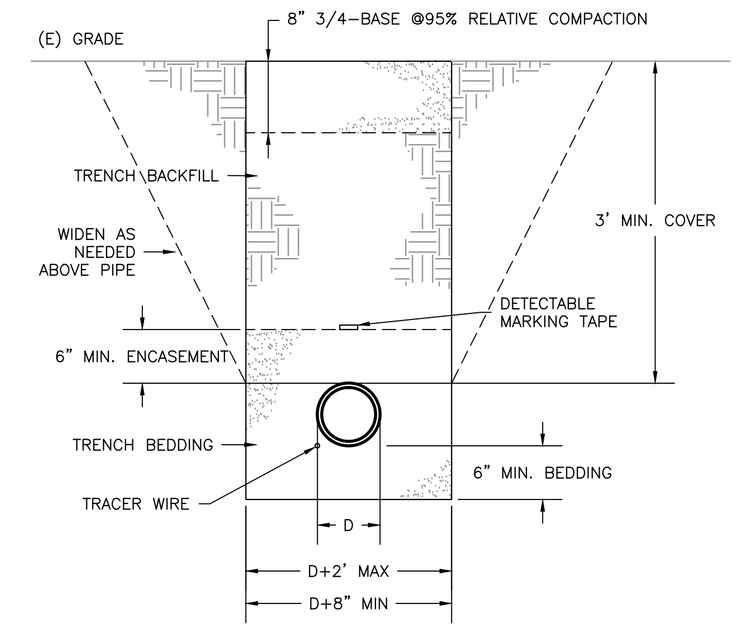

PIPE TRENCH

DETAIL 4 C06 C06

NTS

PIPE TRENCH NOTES:

1. BACKFILL BY HAND, COMPACT OR CONSOLIDATE TO PROVIDE SOLID BEDDING UNDER AND AROUND PIPE.
2. BEDDING MATERIAL SHALL BE GRAVEL OR SAND AND SHALL HAVE A MAXIMUM SIZE OF 1/2" AND BE REASONABLY GRADED FROM COARSE TO FINE WITH A MINIMUM SAND EQUIVALENT OF 28.
3. IMPORT GRAVEL BACKFILL SHALL BE STREAM GRAVEL OR CRUSHED ROCK AND BE REASONABLY WELL GRADED FROM COARSE TO FINE WITH A MAXIMUM SIZE OF 3" AND A MINIMUM SAND EQUIVALENT GREATER THAN 28.
4. JETTING WILL NOT BE ALLOWED.
5. TRENCH BACKFILL WITHIN ROADWAY PER ENGINEER.

TVCE
67 WALNUT WAY
PO BOX 1567
WILLOW CREEK, CA 95573
PHONE (530) 629-3000
FAX (530) 629-3011

REV	DATE	DESCRIPTION	DWN BY	DES BY	CHK BY	APP BY
1	6/30/16	PRELIMINARY DESIGN	EEK	FAM	JTM	TVCE

YUROK TRIBE PLANNING DEPARTMENT
KLAMATH WATER TANK

DETAILS

KLAMATH, DEL NORTE COUNTY, CALIFORNIA

DRAWN BY: E. KEYES
DESIGNED BY: J. McKNIGHT
CHECKED BY: J. McKNIGHT
APPROVED BY:

DATE OF ISSUE: JUNE 2016

SCALE: AS SHOWN

PROJECT NO: 484

DRAWING NO: C06.1

Y:\400-499\#484 - Yurok Roads\2016\484.20_Klamath Water Tank\dwg\06.1_details.dwg, 7/20/2016 8:58:48 AM, ARCH full bleed D (24.00 x 36.00 inches), 1:1, tvce, tvce

NOTES:

1. The table to the right shows minimum sized posts and braces complying with the specifications. Larger or heavier post and brace sizes may be used upon approval.
2. Sections shown in the tables must also comply with the strength requirements and other provisions of the Specifications.
3. Other sections which comply with the strength requirements and other provisions of the Specifications may be used upon approval.
4. Options exercised shall be uniform on any one project.

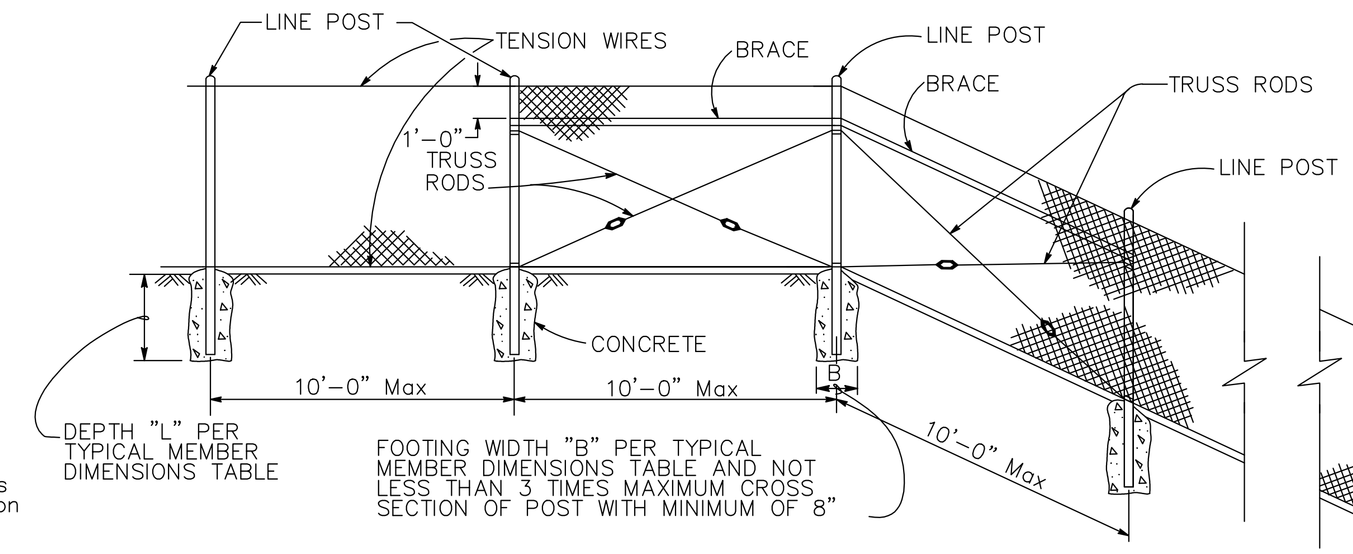

CHAIN LINK FENCE ON SHARP BREAK IN GRADE

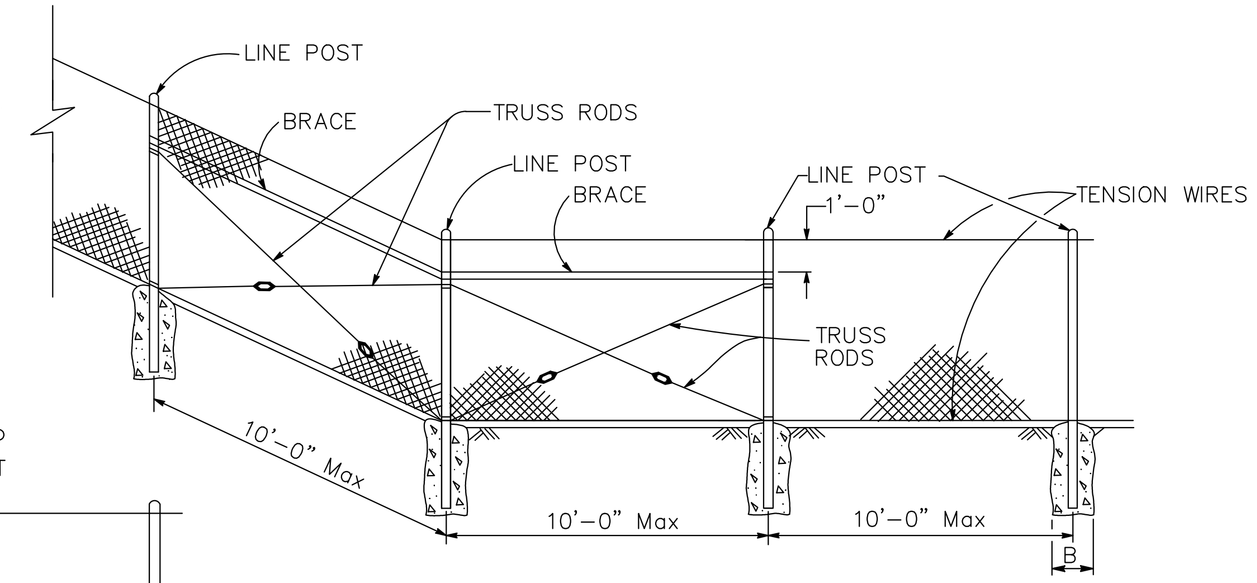

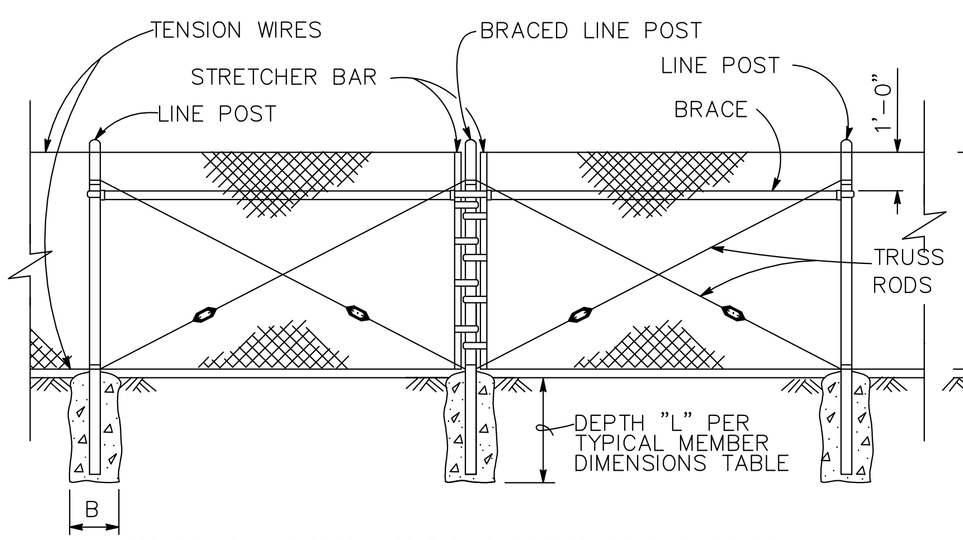

BRACED LINE POST INSTALLATION

Braced line post at intervals not exceeding 1000'

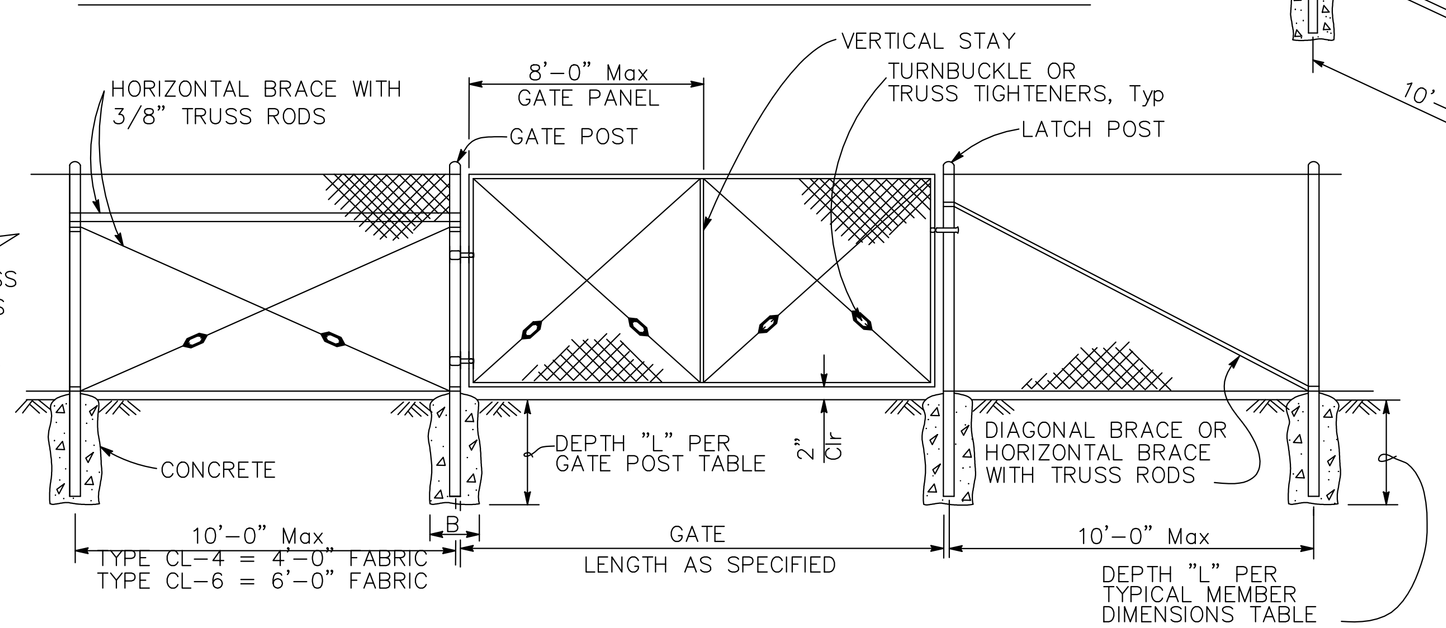

CHAIN LINK GATE INSTALLATION

GATE POST						
FENCE HEIGHT (Max)	SLATTED	B (in)	L (ft)	ROUND PIPE		
				SECTION	ROUND OD PIPE	WEIGHT (lb/ft)
5'-0"	NO	12"	2'-6"	3 Std	3.50"	7.58
6'-0"	NO	12"	2'-6"	3 Std	3.50"	7.58
8'-0"	NO	12"	3'-0"	3 Std	3.50"	7.58
10'-0"	NO	14"	3'-6"	3 Std	3.50"	7.58
5'-0"	YES	12"	3'-0"	31/2 Std	4.00"	9.12
6'-0"	YES	14"	3'-6"	4 Std	4.50"	10.80
8'-0"	YES	18"	3'-6"	5 Std	5.56"	14.60
10'-0"	YES	20"	4'-0"	6 Std	6.63"	19.00

Above post dimensions and weights are minimums.
Larger sizes may be used upon approval.
Maximum Gate Width is 24'-0".

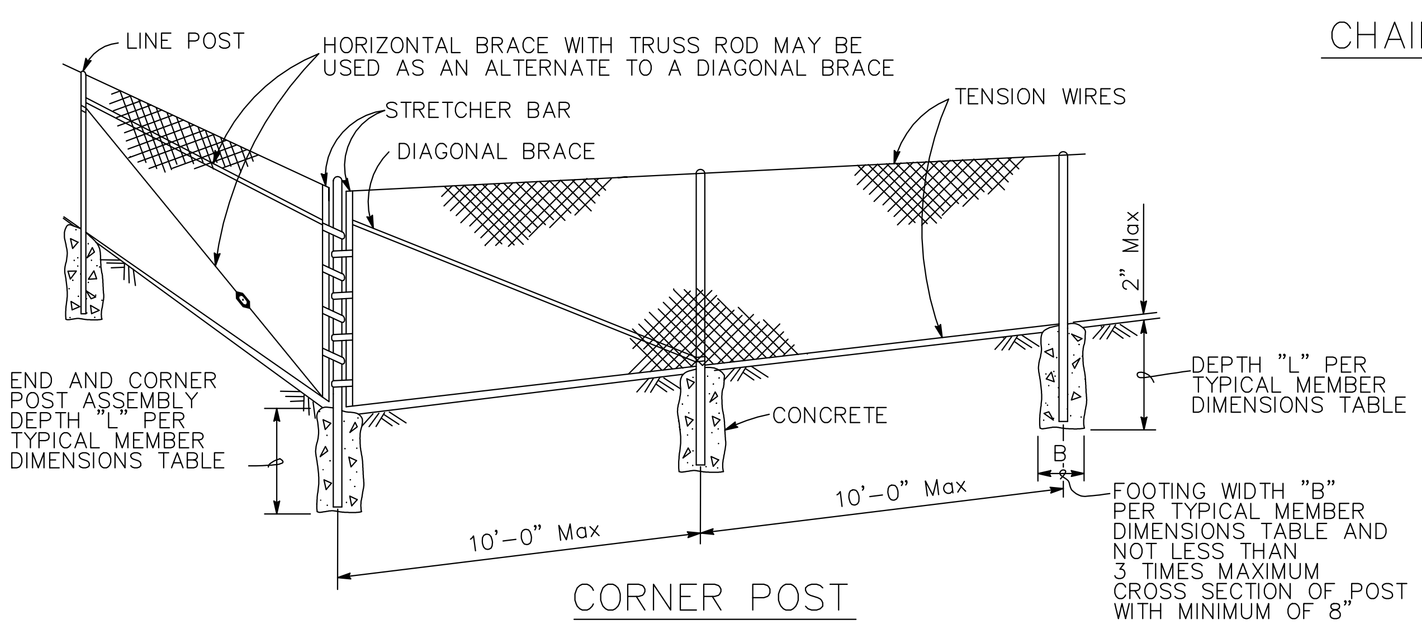

CORNER POST

TYPICAL MEMBER DIMENSIONS (See Notes)													
FENCE HEIGHT (Max)	SLATTED	B (in)	L (ft)	LINE POSTS					BRACES				
				ROUND PIPE			ROLL FORMED		ROUND PIPE			ROLL FORMED	
				SECTION	ROUND OD PIPE	WEIGHT (lb/ft)	SECTION	WEIGHT (lb/ft)	SECTION	ROUND OD PIPE	WEIGHT (lb/ft)	SECTION	WEIGHT (lb/ft)
5'-0"	NO	8"	2'-6"	11/2 Std	1.90"	2.72	1.875" x 1.625"	1.85	2 Std	2.38"	3.66	1.625" x 1.250"	1.35
6'-0"	NO	10"	2'-6"	2 Std	2.38"	3.66	1.875" x 1.625"	2.40	2 Std	2.38"	3.66	1.625" x 1.250"	1.35
8'-0"	NO	12"	3'-0"	21/2 Std	2.88"	5.80	3.250" x 2.500"	4.50	2 Std	2.38"	3.66	1.625" x 1.250"	1.35
10'-0"	NO	14"	3'-6"	3 Std	3.50"	7.58	3.250" x 2.500"	4.50	21/2 Std	2.88"	5.80	1.625" x 1.250"	1.35
5'-0"	YES	12"	3'-0"	31/2 Std	4.00"	9.12	N/A	–	2 Std	2.38"	3.66	N/A	–
6'-0"	YES	14"	3'-0"	4 Std	4.50"	10.80	N/A	–	2 Std	2.38"	3.66	N/A	–
8'-0"	YES	18"	3'-6"	5 Std	5.56"	14.60	N/A	–	2 Std	2.38"	3.66	N/A	–
10'-0"	YES	20"	4'-0"	6 Std	6.63"	19.00	N/A	–	21/2 Std	2.88"	5.80	N/A	–

TVCE
67 WALNUT WAY
PO BOX 1567
WILLOW CREEK, CA 95573
PHONE (530) 629-3000
FAX (530) 629-3011

REV	DATE	DESCRIPTION	DWN BY	DES BY	CHK BY	APP BY
1	6/30/16	PRELIMINARY DESIGN	EEK	FAM	JTM	TVCE

YUROK TRIBE PLANNING DEPARTMENT
KLAMATH WATER TANK

FENCE AND GATE DETAILS

KLAMATH, DEL NORTE COUNTY, CALIFORNIA

DRAWN BY: F. MASTEN
DESIGNED BY: J. McKNIGHT
CHECKED BY: J. McKNIGHT
APPROVED BY:

DATE OF ISSUE: JUNE 2016
SCALE: AS SHOWN
PROJECT NO: 484
DRAWING NO: C07.1

Y:\400-499\#484 - Yurok Roads\2016\484.20_Klamath Water Tank\dwg\07.1_fence.dwg, 7/19/2016 4:48:51 PM, ARCH full bleed D (24.00 x 36.00 inches), 1:1, tvce, tvce

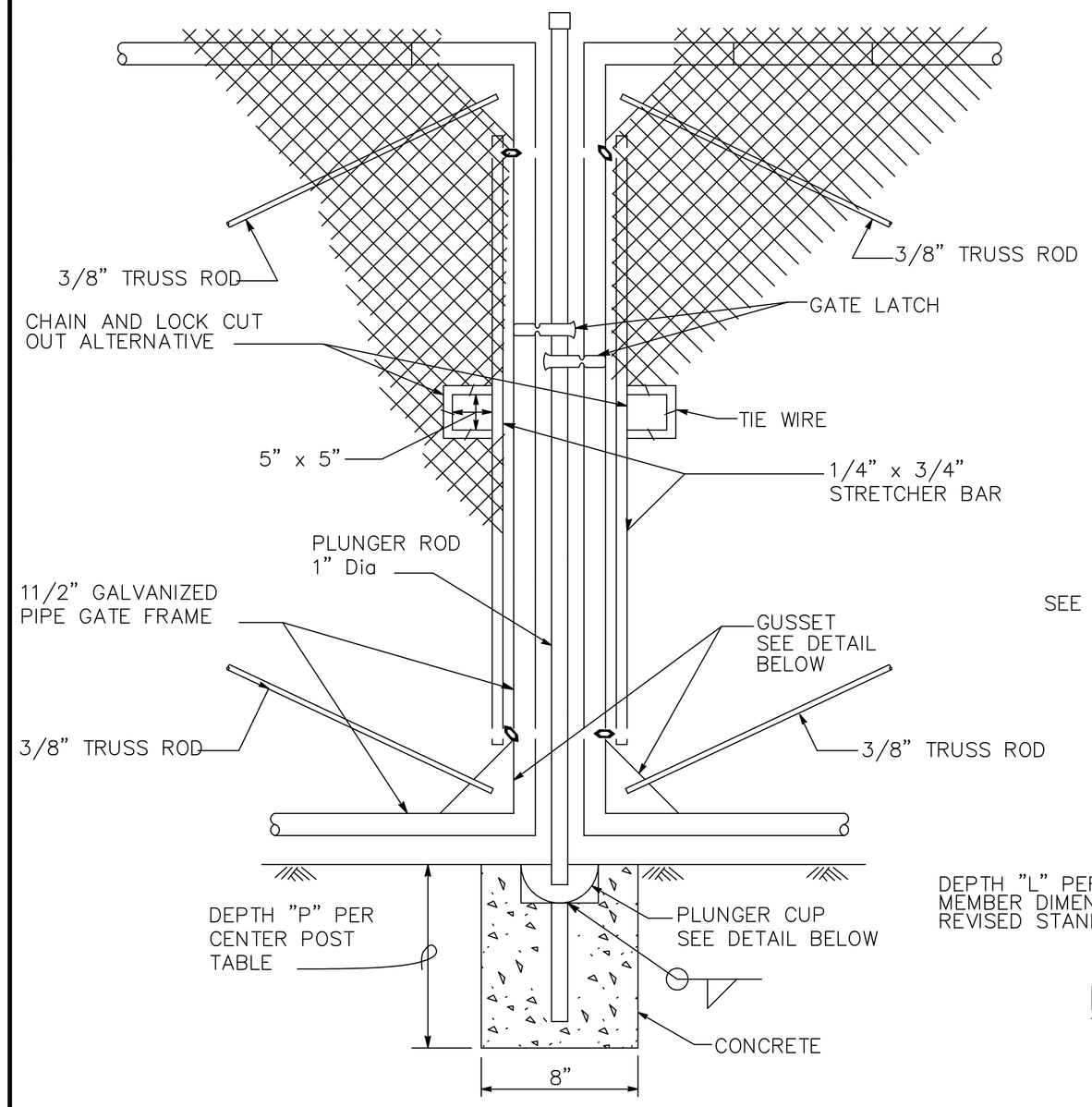

DOUBLE GATE
REMOVABLE CENTER POST

CENTER POST		
FENCE HEIGHT (Max)	SLATTED	P
ALL HEIGHTS	NO	1'-6"
5'-0"	YES	3'-0"
6'-0"	YES	3'-0"
8'-0"	YES	3'-6"
10'-0"	YES	4'-0"

NOTES:

1. B is not less than 3 times maximum cross section of post with minimum of 8".
2. See Revised Standard Plan RSP A85 for Chain Link Fencing dimensions.
3. See Detail A on Standard Plan A86B for connection at headwall.
4. See Detail D on Standard Plan A86B for connection at headwall.

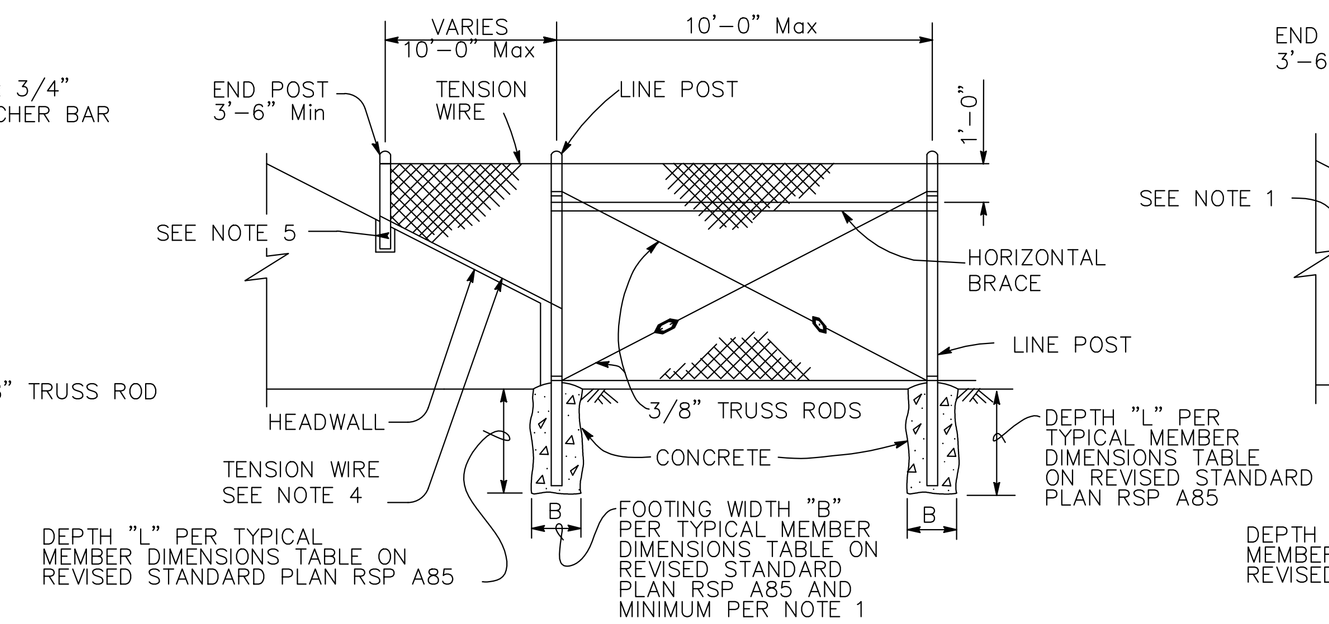

METHOD OF TYING FENCE TO HEADWALL

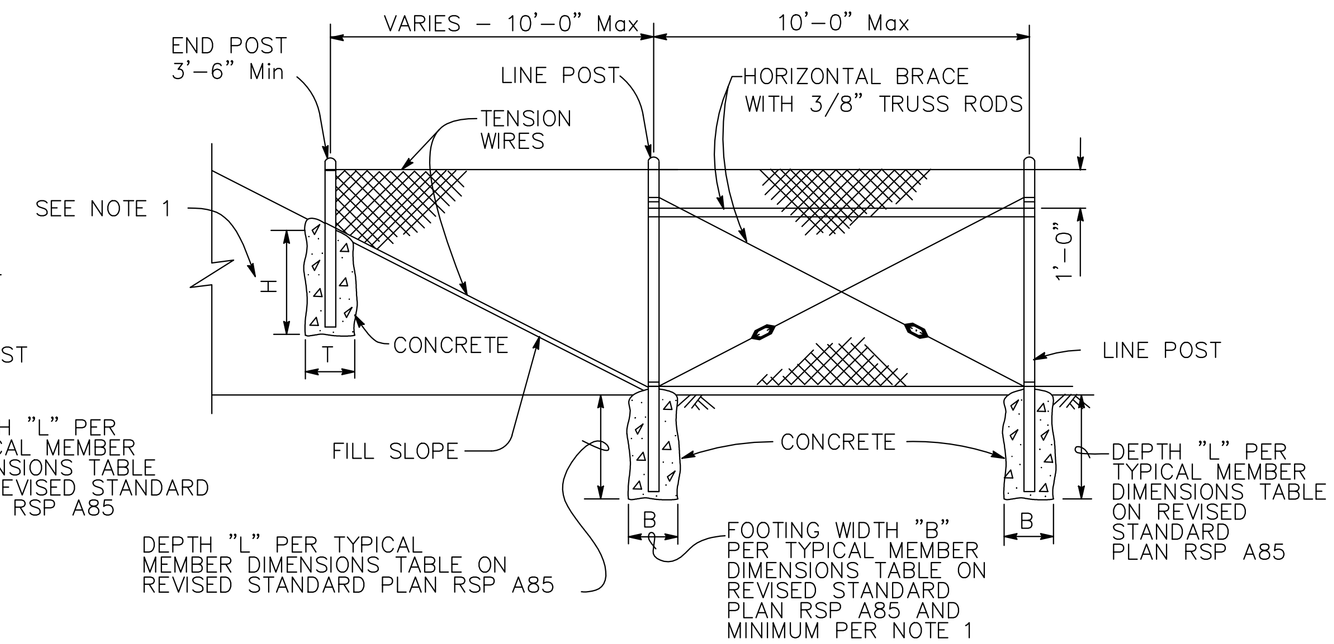

METHOD OF ERECTING FENCE FOR FILL SLOPE

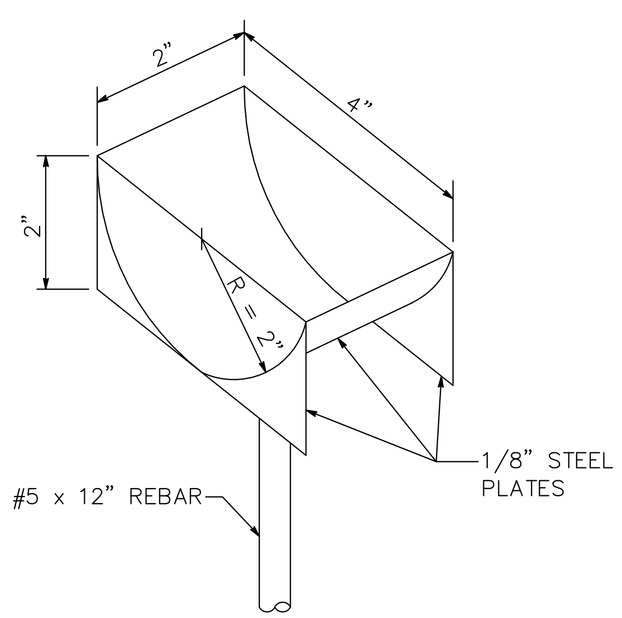

PLUNGER CUP DETAIL

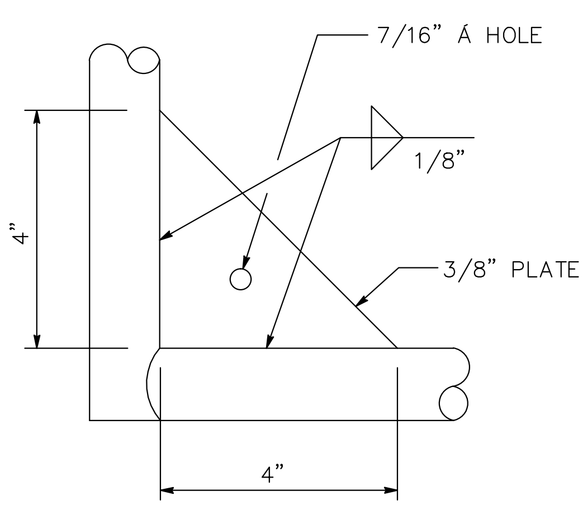

GUSSET DETAIL

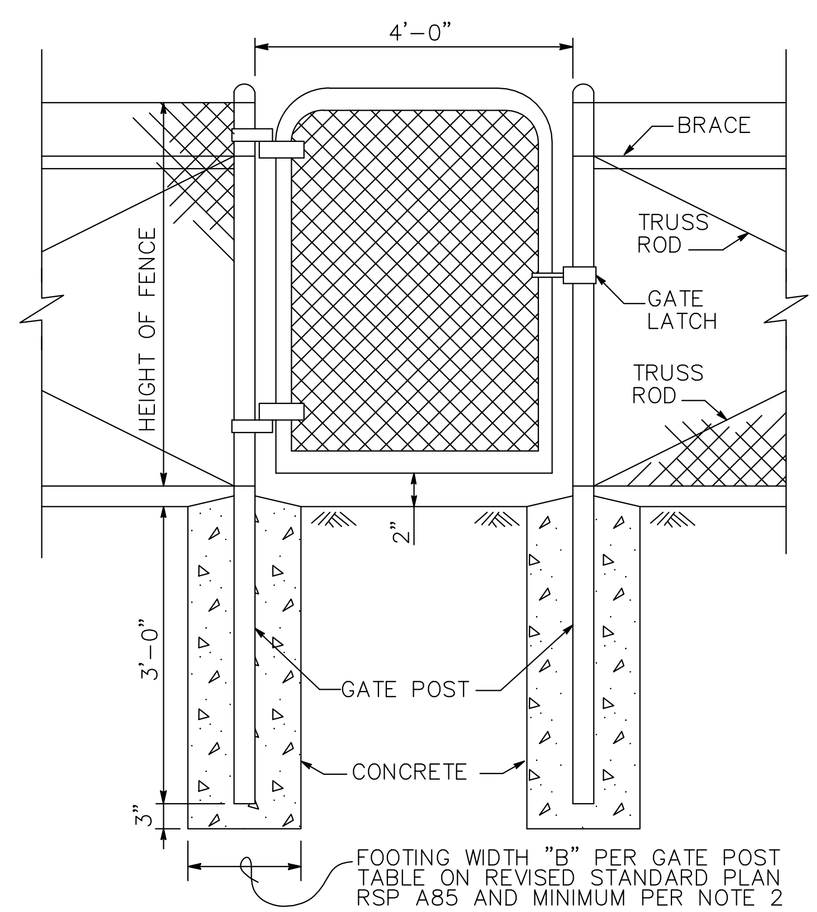

WALK GATE

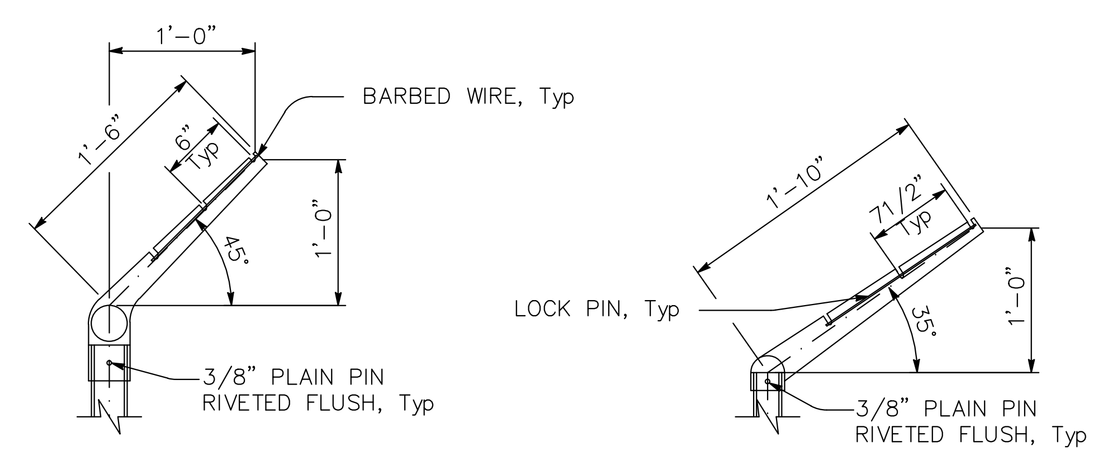

LINE POST

CORNER POST

BARBED WIRE POST TOP

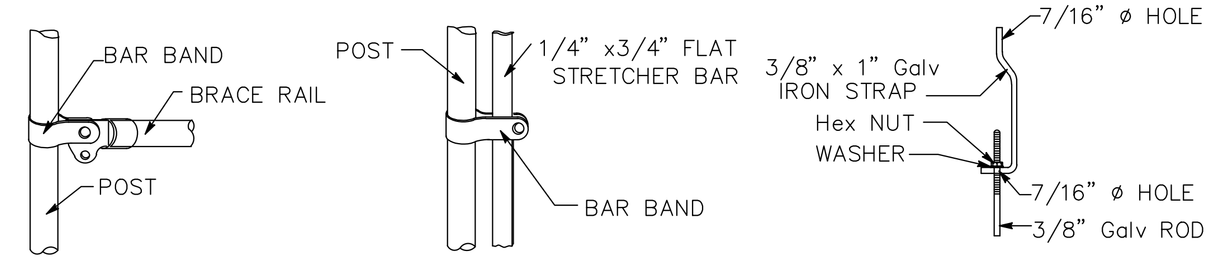

BRACE RAIL

STRETCHER BAR

TRUSS TIGHTENER

TVCE
67 WALNUT WAY
PO BOX 1567
WILLOW CREEK, CA 95573
PHONE (530) 629-3000
FAX (530) 629-3011

REV	DATE	DESCRIPTION	DWN BY	DES BY	CHK BY	APP BY
1	6/30/16	PRELIMINARY DESIGN	EEK	FAM	JTM	TVCE

YUROK TRIBE PLANNING DEPARTMENT
KLAMATH WATER TANK

FENCE AND GATE DETAILS

KLAMATH, DEL NORTE COUNTY, CALIFORNIA

DRAWN BY: F. MASTEN
DESIGNED BY: J. McKNIGHT
CHECKED BY: J. McKNIGHT
APPROVED BY:

DATE OF ISSUE: JUNE 2016

SCALE: AS SHOWN

PROJECT NO: 484

DRAWING NO: C07.2

TRINITY VALLEY CONSULTING ENGINEERS, INC.

Y:\400-499\#484 - Yurok Roads\2016\484.20_Klamath Water Tank\dwg\07.2_fence.dwg, 7/19/2016 4:48:02 PM, ARCH full bleed D (24.00 x 36.00 inches), 1:1, tvce, tvce

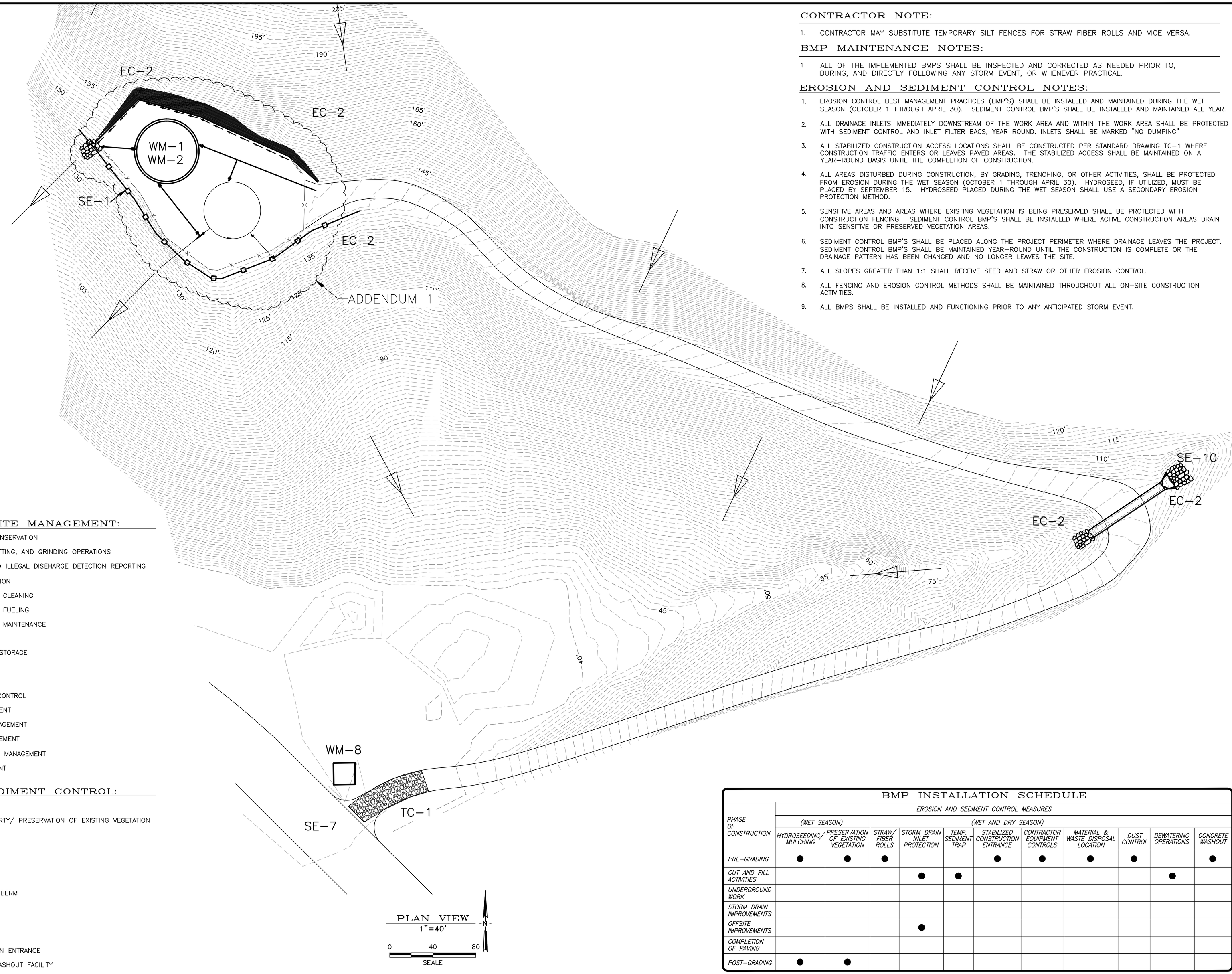

LEGEND:

- ONSITE OVERLAND RELEASE PATH
- OFFSITE OVERLAND RELEASE PATH
- STRAW/FIBER ROLLS
- SILT FENCE
- SEED AND STRAW

CONTRACTOR NOTE:

1. CONTRACTOR MAY SUBSTITUTE TEMPORARY SILT FENCES FOR STRAW FIBER ROLLS AND VICE VERSA.

BMP MAINTENANCE NOTES:

1. ALL OF THE IMPLEMENTED BMPS SHALL BE INSPECTED AND CORRECTED AS NEEDED PRIOR TO, DURING, AND DIRECTLY FOLLOWING ANY STORM EVENT, OR WHENEVER PRACTICAL.

EROSION AND SEDIMENT CONTROL NOTES:

1. EROSION CONTROL BEST MANAGEMENT PRACTICES (BMP'S) SHALL BE INSTALLED AND MAINTAINED DURING THE WET SEASON (OCTOBER 1 THROUGH APRIL 30). SEDIMENT CONTROL BMP'S SHALL BE INSTALLED AND MAINTAINED ALL YEAR.
2. ALL DRAINAGE INLETS IMMEDIATELY DOWNSTREAM OF THE WORK AREA AND WITHIN THE WORK AREA SHALL BE PROTECTED WITH SEDIMENT CONTROL AND INLET FILTER BAGS, YEAR ROUND. INLETS SHALL BE MARKED "NO DUMPING"
3. ALL STABILIZED CONSTRUCTION ACCESS LOCATIONS SHALL BE CONSTRUCTED PER STANDARD DRAWING TC-1 WHERE CONSTRUCTION TRAFFIC ENTERS OR LEAVES PAVED AREAS. THE STABILIZED ACCESS SHALL BE MAINTAINED ON A YEAR-ROUND BASIS UNTIL THE COMPLETION OF CONSTRUCTION.
4. ALL AREAS DISTURBED DURING CONSTRUCTION, BY GRADING, TRENCHING, OR OTHER ACTIVITIES, SHALL BE PROTECTED FROM EROSION DURING THE WET SEASON (OCTOBER 1 THROUGH APRIL 30). HYDROSEED, IF UTILIZED, MUST BE PLACED BY SEPTEMBER 15. HYDROSEED PLACED DURING THE WET SEASON SHALL USE A SECONDARY EROSION PROTECTION METHOD.
5. SENSITIVE AREAS AND AREAS WHERE EXISTING VEGETATION IS BEING PRESERVED SHALL BE PROTECTED WITH CONSTRUCTION FENCING. SEDIMENT CONTROL BMP'S SHALL BE INSTALLED WHERE ACTIVE CONSTRUCTION AREAS DRAIN INTO SENSITIVE OR PRESERVED VEGETATION AREAS.
6. SEDIMENT CONTROL BMP'S SHALL BE PLACED ALONG THE PROJECT PERIMETER WHERE DRAINAGE LEAVES THE PROJECT. SEDIMENT CONTROL BMP'S SHALL BE MAINTAINED YEAR-ROUND UNTIL THE CONSTRUCTION IS COMPLETE OR THE DRAINAGE PATTERN HAS BEEN CHANGED AND NO LONGER LEAVES THE SITE.
7. ALL SLOPES GREATER THAN 1:1 SHALL RECEIVE SEED AND STRAW OR OTHER EROSION CONTROL.
8. ALL FENCING AND EROSION CONTROL METHODS SHALL BE MAINTAINED THROUGHOUT ALL ON-SITE CONSTRUCTION ACTIVITIES.
9. ALL BMPS SHALL BE INSTALLED AND FUNCTIONING PRIOR TO ANY ANTICIPATED STORM EVENT.

CONSTRUCTION SITE MANAGEMENT:

NS-1	WATER CONTROL AND CONSERVATION
NS-3	PAVING, SEALING, SAWCUTTING, AND GRINDING OPERATIONS
NS-6	ILLEGAL CONNECTION AND ILLEGAL DISEHARGE DETECTION REPORTING
NS-7	POTABLE WATER/ IRRIGATION
NS-8	VEHICLE AND EQUIPMENT CLEANING
NS-9	VEHICLE AND EQUIPMENT FUELING
NS-10	VEHICLE AND EQUIPMENT MAINTENANCE
NS-12	CONCRETE CURING
WM-1	MATERIAL DELIVERY AND STORAGE
WM-2	MATERIAL USE
WM-3	STOCKPILE MANAGEMENT
WM-4	SPILL PREVENTION AND CONTROL
WM-6	HAZARD WASTE MANAGEMENT
WM-7	CONTAMINATED SOIL MANAGEMENT
WM-8	CONCRETE WASTE MANAGEMENT
WM-9	SANITARY/ SEPTIC WASTE MANAGEMENT
WM-10	LIQUID WASTE MANAGEMENT

EROSION AND SEDIMENT CONTROL:

EC-1	SEHEDULING
EC-2	PRESERVATION OF PROPERTY/ PRESERVATION OF EXISTING VEGETATION
EC-6	STRAW MULCH
EC-7	GEOTEXTILE AND MATS
SE-1	TEMPORARY SILT FENCE
SE-5	TEMPORARY FIBER ROLLS
SE-6	TEMPORARY GRAVEL BAR BERM
SE-7	STREET SWEEPING
SE-10	INLET PROTECTION
WE-1	WIND EROSION CONTROL
TC-1	TEMPORARY CONSTRUCTION ENTRANCE
WM-8	TEMPORARY CONCRETE WASHOUT FACILITY

PLAN VIEW
1"=40'
0 40 80
SEALE
N

BMP INSTALLATION SCHEDULE

PHASE OF CONSTRUCTION	EROSION AND SEDIMENT CONTROL MEASURES										
	(WET SEASON)		(WET AND DRY SEASON)								
	HYDROSEEDING/ MULCHING	PRESERVATION OF EXISTING VEGETATION	STRAW/ FIBER ROLLS	STORM DRAIN INLET PROTECTION	TEMP. SEDIMENT TRAP	STABILIZED CONSTRUCTION ENTRANCE	CONTRACTOR EQUIPMENT CONTROLS	MATERIAL & WASTE DISPOSAL LOCATION	DUST CONTROL	DEWATERING OPERATIONS	CONCRETE WASHOUT
PRE-GRADING	●	●	●			●	●	●	●		●
CUT AND FILL ACTIVITIES				●	●					●	
UNDERGROUND WORK											
STORM DRAIN IMPROVEMENTS											
OFFSITE IMPROVEMENTS				●							
COMPLETION OF PAVING											
POST-GRADING	●	●									

TVCE
67 WALNUT WAY
PO BOX 1567
WILLOW CREEK, CA 95573
PHONE (530) 629-3000
FAX (530) 629-3011

REV	DATE	DESCRIPTION	DWN BY	DES BY	CHK BY	APP BY
1	6/30/16	PRELIMINARY DESIGN	EEK	FAM	JTM	TVCE

YUROK TRIBE PLANNING DEPARTMENT
KLAMATH WATER TANK

EROSION CONTROL PLAN

KLAMATH, DEL NORTE COUNTY, CALIFORNIA

DRAWN BY: E. KETES
DESIGNED BY: F. MASTEN
CHECKED BY: J. McKNIGHT
APPROVED BY: TVCE

DATE OF ISSUE: JUNE 2016
SCALE: AS SHOWN
PROJECT NO: 484
DRAWING NO: C08.0

TRINITY VALLEY CONSULTING ENGINEERS, INC.

\\Tvceserver\d\TVCE\Projects\400-499\#484 - Yurok Roads\2016\484.20_Klamath Water Tank\dwg\08.0_EROSION CONTROL_rev_1.dwg, 9/2/2016 8:23:18 AM, ARCH full bleed D (24.00 x 36.00 inches), 1:1, tvce, tvce

STRAW MULCH NOTES:

1. STRAW SHALL BE DERIVED FROM WHEAT, RICE, OR BARLEY. WHERE REQUIRED BY THE PLANS, SPECIFICATIONS, PERMITS, OR ENVIRONMENTAL DOCUMENTS, NATIVE GRASS STRAW SHALL BE USED.
2. A TACKIFIER IS THE PREFERRED METHOD FOR ANCHORING STRAW MULCH TO THE SOIL ON SLOPES.
3. CRIMPING, PUNCH ROLLER–TYPE ROLLERS, OR TRACK WALKING MAY ALSO BE USED TO INCORPORATE STRAW MULCH INTO THE SOIL ON SLOPES. TRACK WALKING SHALL ONLY BE USED WHERE OTHER METHODS ARE IMPRACTICAL.
4. AVOID PLACING STRAW ONTO ROADS, SIDEWALKS, DRAINAGE CHANNELS, SOUND WALLS, EXISTING VEGETATION, ETC.
5. STRAW MULCH WITH TACKIFIER SHALL NOT BE APPLIED DURING OR IMMEDIATELY BEFORE RAINFALL.
6. APPLY STRAW AT A MINIMUM RATE OF 4,000 LB/ACRE, EITHER BY MACHINE OR BY HAND DISTRIBUTION.
7. ROUGHEN EMBANKMENTS AND FILL RILLS BEFORE PLACING THE STRAW MULCH BY ROLLING WITH A CRIMPING OR PUNCHING TYPE ROLLER OR BY TRACK WALKING.
8. EVENLY DISTRIBUTE STRAW MULCH ON THE SOIL SURFACE.
9. ON SMALL AREAS, A SPADE OR SHOVEL CAN BE USED TO PUNCH IN STRAW MULCH.
10. ON SLOPES WITH SOILS THAT ARE STABLE ENOUGH AND OF SUFFICIENT GRADIENT TO SAFELY SUPPORT CONSTRUCTION EQUIPMENT WITHOUT CONTRIBUTING TO COMPACTION AND INSTABILITY PROBLEMS, STRAW CAN BE "PUNCHED" INTO THE GROUND USING A KNIFE BLADE ROLLER OR A STRAIGHT BLADED COULTER, KNOWN COMMERCIALLY AS A "CRIMPER".
11. ON SMALL AREAS AND/OR STEEP SLOPES, STRAW CAN ALSO BE HELD IN PLACE USING PLASTIC NETTING OR JUTE. THE NETTING SHALL BE HELD IN PLACE USING 11 GAUGE WIRE STAPLES, GEOTEXTILE PINS OR WOODEN STAKES AS DESCRIBED IN EC–7, GEOTEXTILES AND MATS.
12. TACKIFIER ACTS TO GLUE THE STRAW FIBERS TOGETHER AND TO THE SOIL SURFACE. THE TACKIFIER SHALL BE SELECTED BASED ON LONGEVITY AND ABILITY TO HOLD THE FIBERS IN PLACE. A TACKIFIER IS TYPICALLY APPLIED AT A RATE OF 125 LB/ACRE. IN WINDY CONDITIONS, THE RATES ARE TYPICALLY 180LB/ACRE.

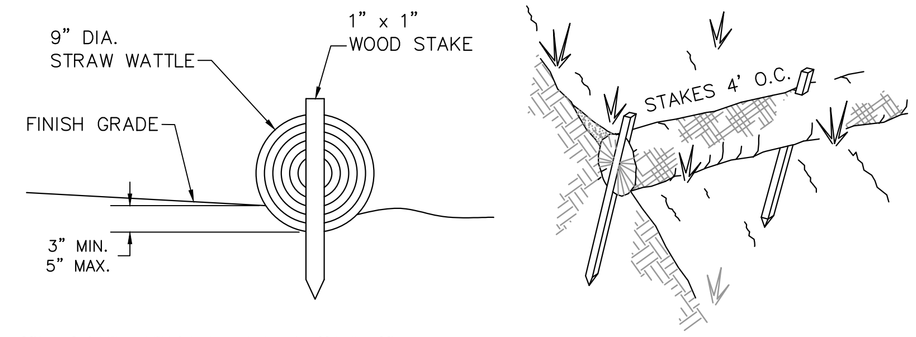

STRAW WATTLE NOTES:

1. STRAW WATTLES SHALL BE INSTALLED WITH 18 OR 24 INCH WOOD STAKES AT FOUR FEET ON CENTER. THE ENDS OF ADJACENT STRAW WATTLES SHALL BE ABUTTED TO EACH OTHER SNUGLY OR OVERLAPPED BY SIX INCHES.
2. STRAW ROLL INSTALLTION REQUIRES THE PLACEMENT AND SECURE STAKING OF THE ROLL IN A TRENCH, 3"–5" DEEP. RUNOFF MUST NOT BE ALLOWED TO RUN UNDER OR AROUND THE ROLL.

STRAW WATTLE INSTALLATION DETAIL
NTS

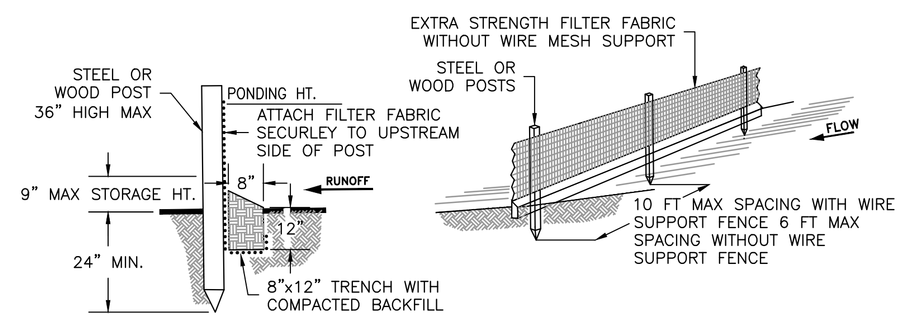

SILT FENCE NOTES:

1. THE CONTRACTOR SHALL INSPECT AND REPAIR FENCE AFTER EACH STORM EVENT.
2. CONTRACTOR SHALL REMOVE SEDIMENT AS NECESSARY. REMOVED SEDIMENT SHALL BE DEPOSITED TO AN AREA THAT WILL NOT CONTRIBUTE SEDIMENT OFF–SITE AND IN AN AREA THAT CAN BE PERMANENTLY STABILIZED.
3. SILT FENCE SHALL BE PLACED ON SLOPE CONTOURS TO MAXIMIZE PONDING EFFICIENCY.

SILT FENCE DETAILS
NTS

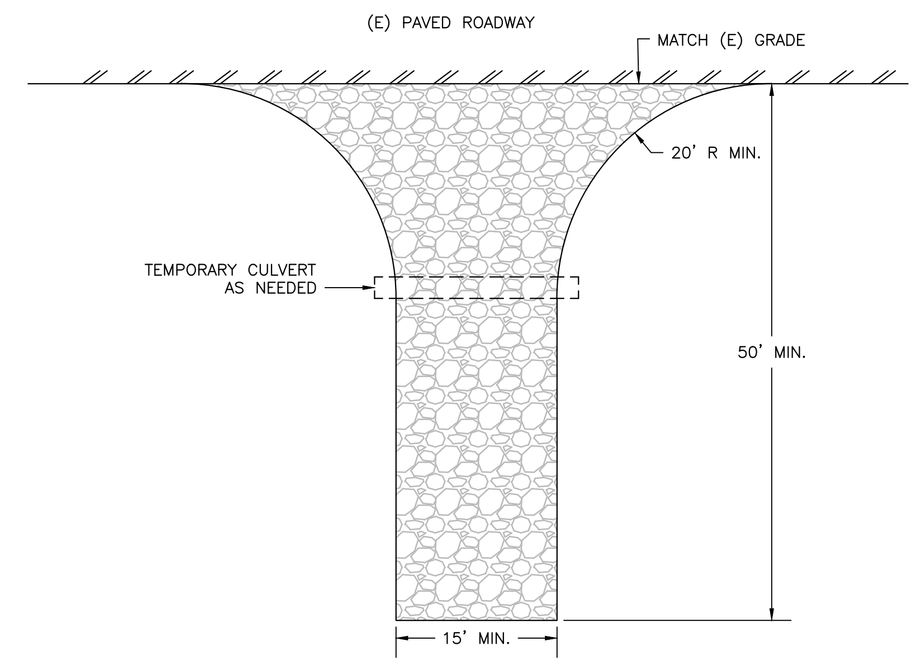

STABILIZED CONTRUCTION ENTRANCE
NTS

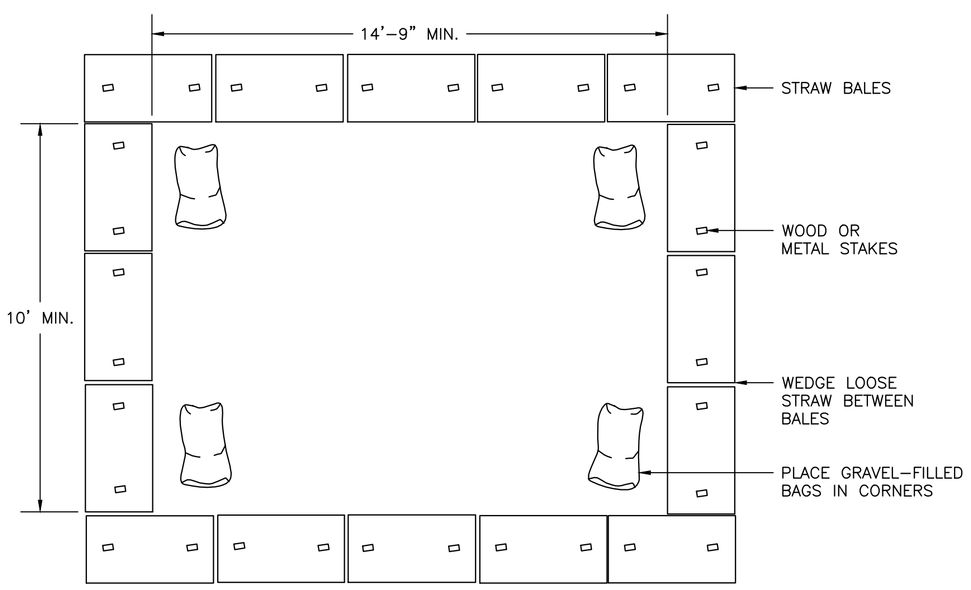

PLAN
TEMPORARY CONCRETE WAHSOUT FACILITY
NTS

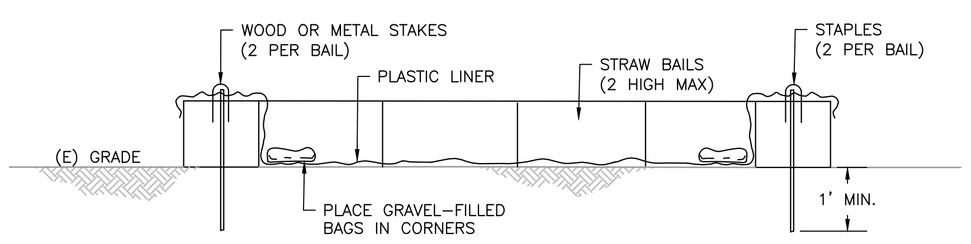

PROFILE
TEMPORARY CONCRETE WAHSOUT FACILITY
NTS

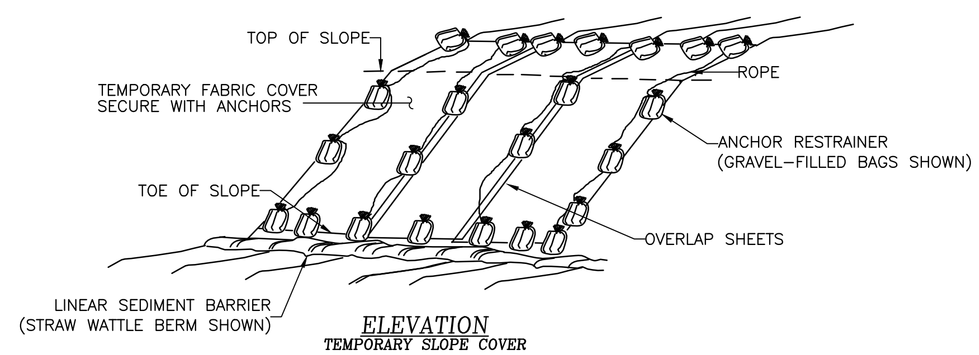

ELEVATION
TEMPORARY SLOPE COVER

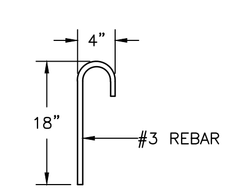

DETAIL
STEEL REINFORCING BAR ANCHOR

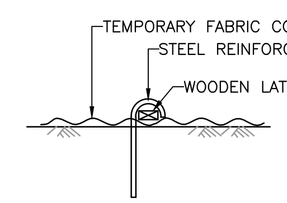

SECTION
STEEL BAR & WOODEN LATH

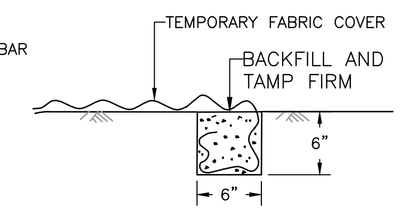

SECTION
KEY TRENCH

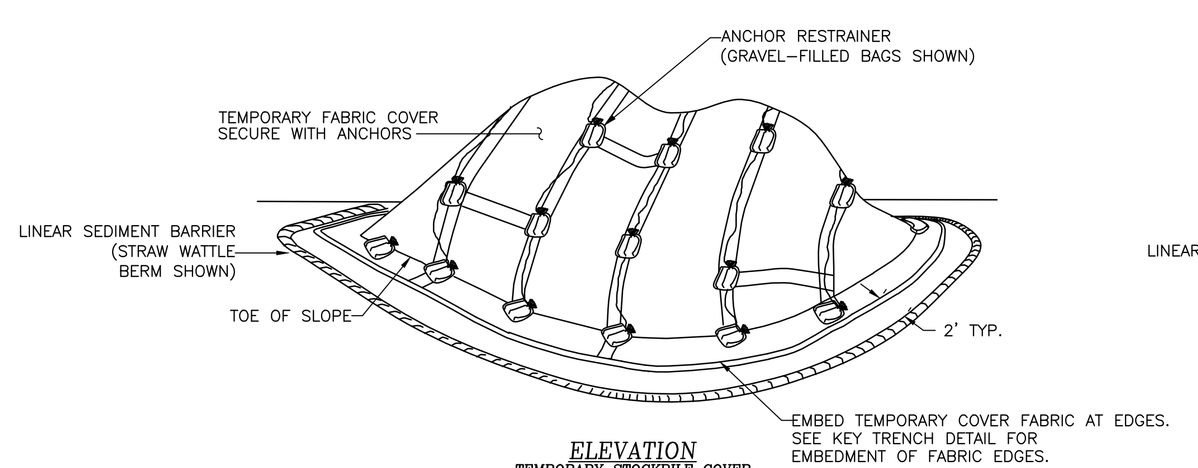

ELEVATION
TEMPORARY STOCKPILE COVER

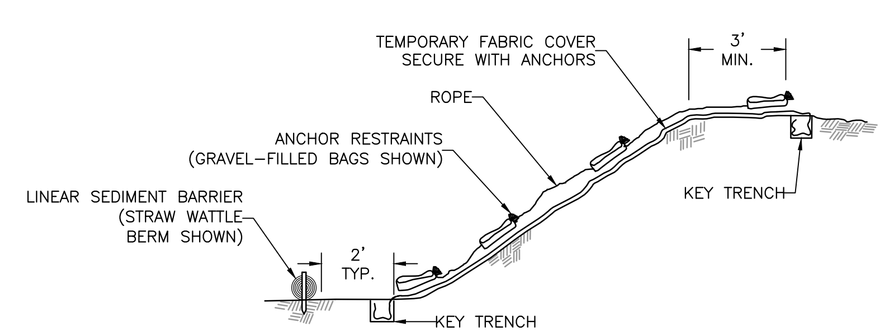

SECTION
TEMPORARY COVER

TVCE
67 WALNUT WAY
PO BOX 1567
WILLOW CREEK, CA 95573
PHONE (530) 629–3000
FAX (530) 629–3011

REV	DATE	DESCRIPTION	DWN BY	DES BY	CHK BY	APP BY
1	6/30/16	PRELIMINARY DESIGN	EEK	FAM	JTM	TVCE

YUROK TRIBE PLANNING DEPARTMENT
KLAMATH WATER TANK

EROSION CONTROL DETAILS

KLAMATH, DEL NORTE COUNTY, CALIFORNIA

DRAWN BY: E. KEYES
DESIGNED BY: F. MASTEN
CHECKED BY: J. McKNIGHT
APPROVED BY: TVCE

DATE OF ISSUE: JUNE 2016
SCALE: AS SHOWN
PROJECT NO: 484
DRAWING NO: C08.1

TRINITY VALLEY CONSULTING ENGINEERS, INC.

\\Tvceserver\d\TVCE\Projects\400-499\#484 – Yurok Roads\2016\484.20_Klamath Water Tank\dwg\08.1_EROSION_DETAILS_rev_0.dwg, 6/17/2016 1:50:56 PM, ARCH full bleed D (24.00 x 36.00 inches), 1:1, tvce, tvce
1" 1/2" 0"

FOUNDATION NOTES:

1. ALL FOOTING EXCAVATION SHALL BE AS NEAT AS PRACTICABLE. OVER EXCAVATION IN DEPTH SHALL BE FILLED WITH CONCRETE, AND IN WIDTH MAY BE FILLED WITH CONCRETE OR COMPACTED BACKFILL. ALL LOOSE SOILS SHALL BE REMOVED FROM EXCAVATION PRIOR TO PLACEMENT OF REINFORCEMENT, CONCRETE OR ENGINEERED FILL. FOOTING EXCAVATION TO BE 2" WIDER THAN SHOWN UNLESS FOOTINGS ARE FORMED.
2. ALL FOUNDATIONS SHALL BEAR ON FIRM, UNDISTURBED NATIVE SOILS OR ENGINEERED FILL AT OR EXCEEDING DEPTHS SHOWN ON THE DRAWINGS.
3. WATER SHALL BE REMOVED FROM FOUNDATION EXCAVATION PRIOR TO PLACING OF CONCRETE.
4. THE CONTRACTOR IS RESPONSIBLE FOR ALL SHORING, ETC. NECESSARY TO SUPPORT CUT AND/ OR FILL BANKS DURING EXCAVATION, AND FORMING AND PLACEMENT OF CONCRETE.
5. REINFORCING STEEL SHALL BE DEFORMED STEEL CONFORMING TO THE REQUIREMENTS OF ASTM A-615, GRADE 60 FOR #4 BARS OR LARGER, AND GRADE 40 FOR #3 BARS.
6. DETAILING, FABRICATION AND ERECTION OF REINFORCING BARS SHALL CONFORM TO THE 'ACI DETAIL MANUAL' – 1988.
7. CONCRETE PROTECTION FOR REINFORCING SHALL BE AT LEAST EQUAL TO THE DIAMETER OF THE BARS. MINIMUM COVER FOR CAST-IN-PLACE CONCRETE SHALL BE AS FOLLOWS.

A. POURED OVER EARTH	3"
B. POURED AGAINST FORM BELOW GRADE	2"
C. FORMED SLAB (#11 BARS AND SMALLER)	32/14"
D. SLABS ON GROUND (FROM TOP OF SLAB)	1"
E. COLUMN AND BEAM MAIN BARS, TIES, STIRRUPS, SPIRALS	1½"
F. WALLS EXPOSED TO WEATHER (#6 THROUGH #18)	2"
(#5 BAR & SMALLER)	1½"
G. WALLS NOT EXPOSED TO WEATHER (#11 AND SMALLER)	¾"

8. REINFORCING BARS SHALL BE CLEAN OF RUST, GREASE OR OTHER MATERIAL LIKELY TO IMPAIR BOND. BENDS SHALL BE MADE COLD.
9. MINIMUM LAP DISTANCE FOR REINFORCING STEEL SHALL BE 24" OR 32 BAR DIAMETERS WHICHER IS GREATER.
10. ALL CONNECTORS, FASTENERS, AND METAL OBJECTS IN CONTACT WITH PRESSURE TREATED WOOD SHALL BE EITHER STAINLESS STEEL OR HOT-DIPPED GALVANIZED.

CONCRETE NOTES:

1. THE MINIMUM ULTIMATE COMPRESSIVE STRENGTH OF CONCRETE AT 28 DAYS SHALL BE 2500 PSI AND SHALL BE A MINIMUM OF A FIVE SACK MIX WITH NO MORE THAN SEVEN GALLONS OF WATER PER CUBIC YARD..
2. ALL CONCRETE SHALL BE REGULAR WEIGHT HARD ROCK TYPE (150# /CF). MAXIMUM AGGREGATE SIZE FOR SLABS ON GRADE TO BE ¾" AND 1½" FOR FOUNDATIONS. AGGREGATE SHALL CONFORM TO ASTM C-33. CEMENT SHALL CONFORM TO C-150 (TYPE II), UNLESS ALKALINE SOILS. WATER-REDUCING ADMIXTURES, RETARDING ADMIXTURES, ACCELERATING ADMIXTURES, WATER-REDUCING AND RETARDING ADMIXTURES, AND WATER-REDUCING AND ACCELERATING ADMIXTURES SHALL CONFORM TO 'SPECIFICATION FOR CHEMICAL ADMIXTURES FOR CONCRETE' (ASTM C 494).
3. SLABS, BEAMS, WALLS AND OTHER CONCRETE SHALL BE KEPT CONTINUOUSLY WET FOR 48 HOURS AFTER PLACEMENT AND SHALL BE KEPT DAMP FOR 7 DAYS AFTER PLACEMENT. SLABS SHALL HAVE CURE /SEALER APPLIED IMMEDIATELY AFTER FINISHING IF OTHER FINISHES ARE NOT AFFECTED SUPERIMPOSED LOADS SHALL NOT BE APPLIED TO ELEVATED STRUCTURAL MEMBERS OR WALLS PRIOR TO 7 DAYS MINIMUM AFTER CONCRETE HAS REACHED DESIGN STRENGTH. RESHORING SHALL REMAIN IN PLACE 28 DAYS MINIMUM, AT NO TIME DURING A RESHORING PROCESS SHALL THE CONCRETE MEMBER BE UNSUPPORTED.
4. CONCRETE SHALL NOT FREE FALL MORE THAN SIX FEET.
5. KEYED CONSTRUCTION JOINTS SHALL BE USED IN ALL CASES. ALL CONSTRUCTION JOINTS SHALL BE THOROUGHLY CLEANED AND ALL LAITANCE SHALL BE REMOVED. ALL VERTICAL JOINTS SHALL BE THOROUGHLY WETTED AND SLUSHED WITH A COAT OF NEAT CEMENT IMMEDIATELY BEFORE PLACING NEW CONCRETE.
6. PROVIDE CONTROL JOINTS PER PLAN AND /OR EVERY 20 FEET ON CENTER. FILL WITH APPROVED CAULKING.
7. PROVIDE ¾" CHAMFER AT EXPOSED EDGES OF CONCRETE BEAMS AND COLUMNS U.N.O.
8. ANCHOR BOLT SIZES AND LOCATIONS SHALL BE PER THE BUILDING PLANS. EMBEDMENT DEPTHS SHALL BE A MINIMUM OF 7".

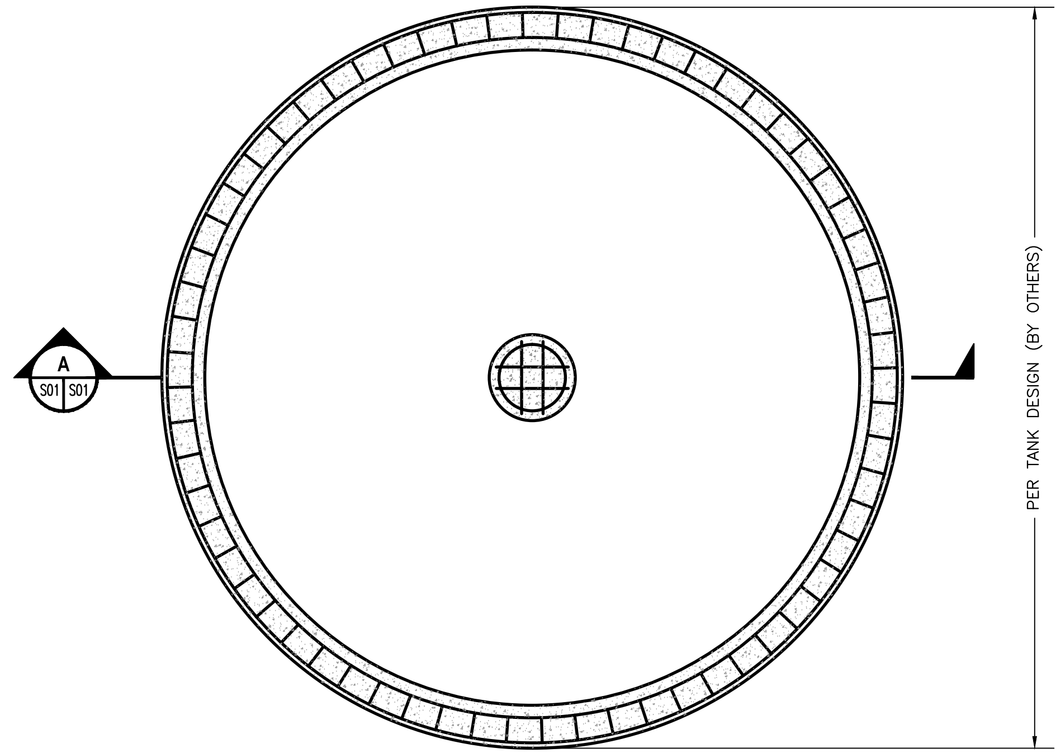

FOUNDATION PLAN
DETAIL 1 (S01 S01)
1"-5'

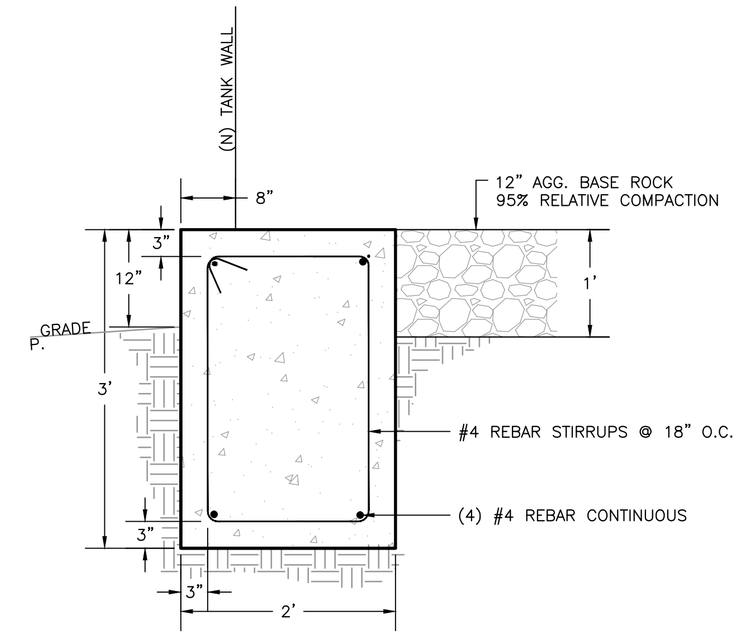

FOUNDATION PLAN
DETAIL 2 (S01 S01)
nts

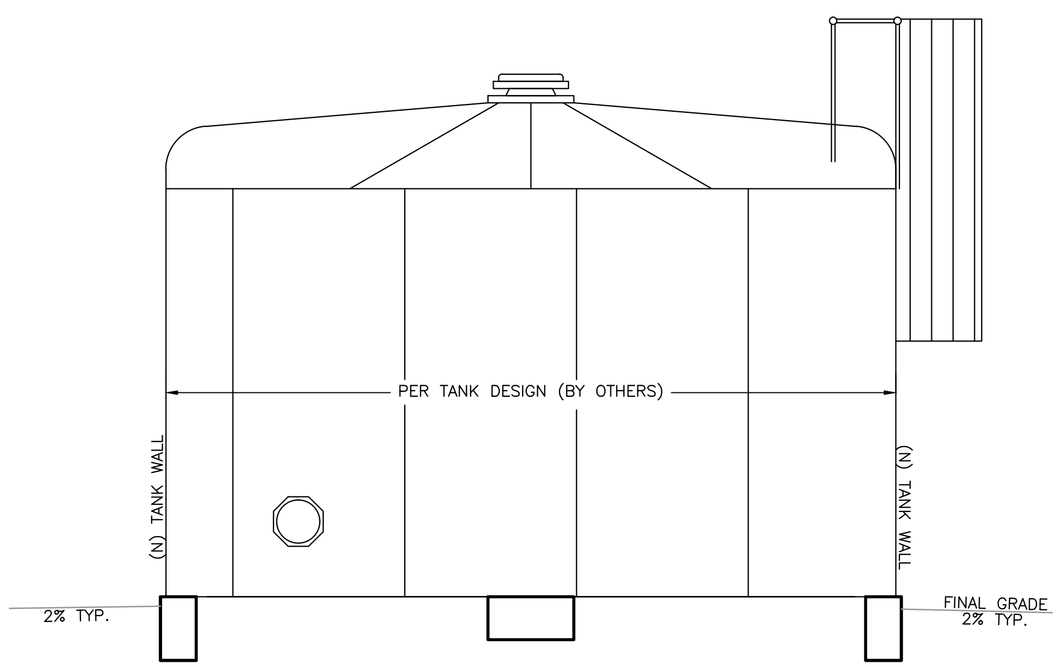

FOUNDATION PROFILE
SECTION B (S01 S01)
1"-5'

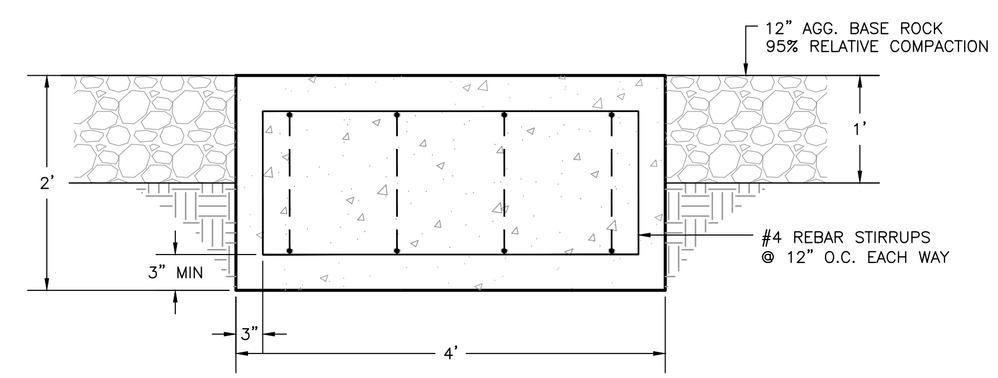

FOUNDATION PLAN
DETAIL 3 (S01 S01)
1"-1'

NOTE:

1. FOUNDATION IS SUBJECT TO REVIEW OF LOADING AND REQUIREMENTS OF THE TANK MANUFACTURER.

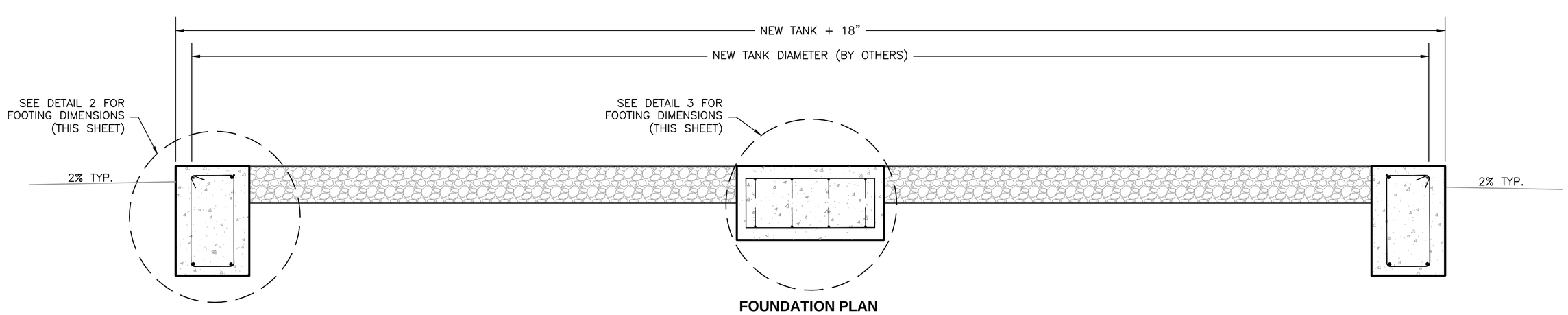

FOUNDATION PLAN
SECTION A (S01 S01)
1/2"-1'

TVCE
67 WALNUT WAY
PO BOX 1462
WILLOW CREEK, CA 95573
PHONE (530) 629-3000
FAX (530) 629-3011

REV	DATE	DESCRIPTION	DWN BY	DES BY	CHK BY	APP BY
1	6/30/16	PRELIMINARY DESIGN	EEK	JTM	JTM	TVCE

YUROK TRIBE PLANNING DEPARTMENT
KLAMATH WATER TANK

TANK FOUNDATION

KLAMATH, DEL NORTE COUNTY, CALIFORNIA

DRAWN BY: E. KEYES
DESIGNED BY: J. McKNIGHT
CHECKED BY: J. McKNIGHT
APPROVED BY:

DATE OF ISSUE: JUNE 2016
SCALE: AS SHOWN
PROJECT NO: 484
DRAWING NO: S01

TRINITY VALLEY CONSULTING ENGINEERS, INC.

Y:\400-499\#484 - Yurok Roads\2016\484.20_Klamath Water Tank\dwg\S01_foundation.dwg, 7/26/2016 9:12:09 AM, ARCH full bleed D (24.00 x 36.00 Inches), 1:1, tvce, tvce
1" 1/2" 0" 1"